Laboratory Investigation of Turbulent Mixing and Entrainment in Stratified Flow

Jun Chen[†], Philippe Odier[†,‡], Michael Rivera[†], and Robert Ecke[†]
[†]*Condensed Matter and Thermal Physics Group and*
Center for Nonlinear Studies
Los Alamos National Laboratory
Los Alamos, New Mexico, 87545, U.S.A.
[‡]*Permanent Address: Laboratoire de Physique*
ENS Lyon, 46 alle d'Italie,
69364 Lyon cedex 07, France

(Dated: April 15, 2007)

Oceanic overflows occur at different locations in Earth's oceans. For example, dense (cold and salty) water from Nordic Seas flows over a ridge of the North Atlantic Basin and moves down along the bottom floor of Denmark Strait, driven by the force of gravity. On its way down into north Atlantic ocean, the ambient less dense fluid mixes with the gravity current and is entrained into the main stream, shown in figure 1. Numerical experiments have shown that the global thermohaline circulation is very sensitive to this localized phenomena in high latitude region (see, e.g. [1] and [2]). In ocean models used in the above-mentioned numerical experiments, mixing and entrainment of the ambient fluid into the dense overflow water is highly dependent on resolution and vertical grid-type; at climate-model resolution these processes are poorly represented, resulting in incorrect water properties downstream from the overflow [2, 3]. It in turn affects the overturning and transport of the thermohaline circulation [2]. Due to this limitation of resolution, the sub-grid scale structures cannot be resolved in simulation. Instead, certain parameterization must be applied to express the unresolved physics using resolved parameters. The performance of the parameterization is to be tested though either in-situ measurements or laboratory experiments.

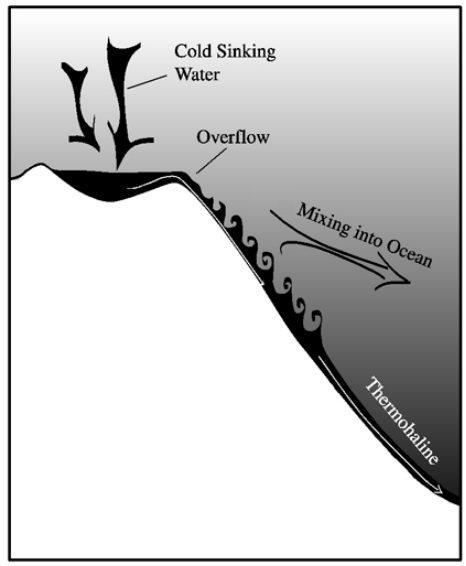

FIG. 1: Schematic illustration of an ocean overflow and mixing with ambient fluid.

A schematic description of the LANL Ocean Overflow Facility is shown in figure 2. The central part of the facility is a water tank, with dimensions of $180(L) \times 48(H) \times 52(W)$ cm^3, made of acrylic side walls and aluminum bottom plate. Prior to experiment, this main tank is filled with dense fluid (salt water). A secondary tank is filled light fluid (ethanol solution). The density difference between the main tank and the secondary tank can be set at a controlled level and more details will be provided in later section. A pump is used to pump the light fluid from the secondary tank to the main tank through an expander-nozzle combination. Thus a gravity current with less density is introduced into a denser environment. Twelve layers of perforated metal plates are set vertically inside the expander to generate an uniform flow pattern. The pump is controlled by a variable frequency drive so that the initial injection speed of the gravity current is adjustable. An acrylic plate, 1.2 cm thick and 150 cm long, is set up inside the tank across the entire width. The angle of inclination α is set to 10°. The origin of the coordinate system is set at the jet exit. The x direction is along the inclined plate and the z direction is perpendicular to the plate. One end of the plate is attached to the nozzle ($y - z$ cross section: 48×5 cm^2). The curvature of the nozzle is designed to obtain a smooth transition and match with the inclined plate. A locking gate system is installed near the tip of the nozzle. In experiment preparation process, this gate is locked to prevent unnecessary fluid exchanging between the main tank and the secondary tank, and it is opened just before the experiment starts. To rule out the adverse effect of temperature difference, a small heating element is installed inside the secondary tank for a fine adjustment of temperature. The temperature in both tanks is constant (20-21°C under normal experimental conditions). In order to increase the turbulence fluctuation in the gravity current, four active grids, driven by four AC motors at 200 RPM, are deployed along y direction near the conjunction of expander and nozzle. This active grids technique has been applied successfully to obtain nearly homogenous and isotropic turbulent field with relatively high microscale Reynolds number R_λ. One is

reminded the present setup is a reversed one compared to the oceanic overflow: In this setup light fluid moves underneath an upwardly inclined plate into a dense environment, while in oceanic overflow dense fluid flows above a downwardly inclined plate into a less dense environment. The physics for these two scenarios should be the same by symmetry.

A combination of Particle Image Velocimetry (PIV) and Planar Laser Induced Fluorescence (PLIF) is developed for simultaneous velocity and density measurements, as shown in figure 3. Several implementations of similar technique were reported [4–6]. A dual-head Nd:YAG laser (532 nm, 90 mJ/pulse) is used for both PIV illumination and PLIF excitation. Through PIV optics mounted on top of the main tank and inclined plate, the laser beam is expanded into a 1 mm thick laser sheet and illuminates the sample area in the $x - z$ plane along the center line of the tank. To eliminate the influence of free surface and minimize the damping of laser energy in water, the laser sheet enters the test section through an hollow optical assess box made of Acrylic.

To apply Particle Image Velocimetry (PIV) for velocity measurement, the water is uniformly seeded with hollow glass beads (median diameter 10 μm, specific gravity 1.1). A 12-bit RedLake ES 4020 digital camera, with 2048×2048 pixels resolution, is used to record the particle images under triggered double exposure mode. The acquired particle images are enhanced and then applied cross-correlation analysis to retrieve velocity fields [7].

Rhodamine 6G, a laser induced fluorescence dye, is mixed uniformly in the secondary tank with the injected light fluid. The dye absorbs excitation light around 530 nm and emits broadband fluorescence with a peak occurring at 555 nm . The fluorescence image is recorded by another ES 4020 digital camera. For a given excitation illumination, there is a linear relationship between the intensity of fluorescence emission and the dye concentration [5].

A typical instantaneous velocity field from PIV measurement is shown in figure 4. Figure 5 shows typical instantaneous visualization of density and the y-component of vorticity calculated from velocity, at three consecutive downstream locations. A time sequence of these snapshots reveals the evolution of mixing structures. The Kelvin-Holmholtz rolls are clearly visible, especially close to the nozzle. As the flow moves downstream, more fine and complex structures appear around the mixing interface. The size of the mixing zone increases and we observe detachment of filaments from the mixing zone into ambient water (detrainment).

At the present stage, we are in middle of extensive data acquisition.The ensemble averaged mean and rms parameters will be calculated. Other on-going efforts include full parameter characterization of the mixing properties and inspection of eddy-visocity type model. The influence of Reynolds number and Richardson number will be also examined.

[1] S. Bacon, Nature **394**, 871 (1998).
[2] Willebrand, J. et.al., Prog. Oceanogr. **48**, 123 (2001).
[3] S. Legg, R. W. Hallberg, and J. B. Girton, Ocean Modelling **11**, 69 (2006).
[4] H. Hu, T. Kobayashi, S. Segawa, and N. Taniguchi, Exp. in Fluids **Suppl.**, S141 (2000).
[5] A. Borg, J. Bolinder, and L. Fuchs, Exp. in Fluids **31**, 140 (2001).
[6] L. K. Hjertager, B. H. Hjertager, N. G. Deen, and T. Solberg, The Canadian Journal of Chemical Engineering **81**, 1149 (2003).
[7] G. Roth and J. Katz, Meas. Sci. Technol. **12**, 238 (2001).

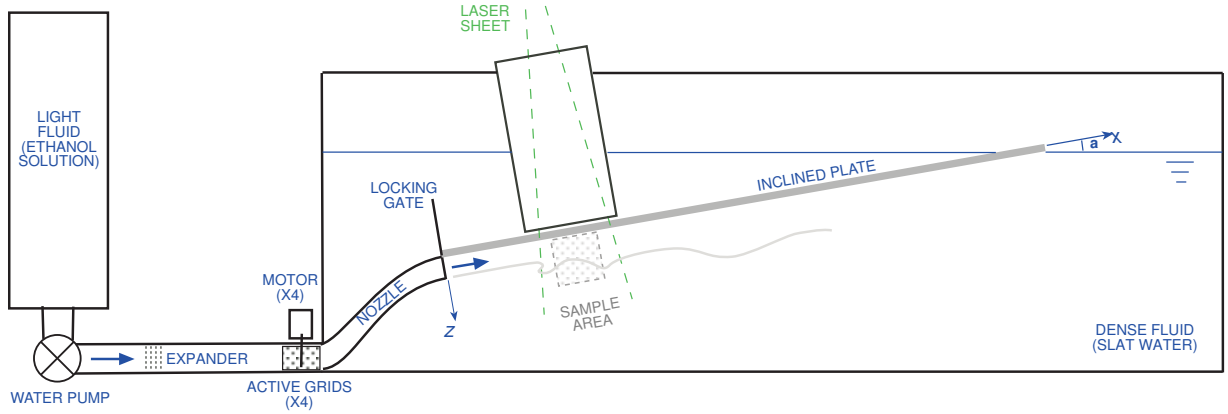

FIG. 2: Schematic illustration of the LANL Oceanic Overflow Facility.

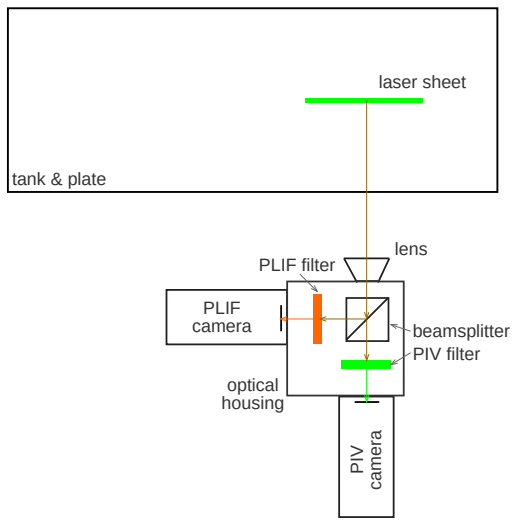

FIG. 3: Schematics of combined PIV-PLIF system.

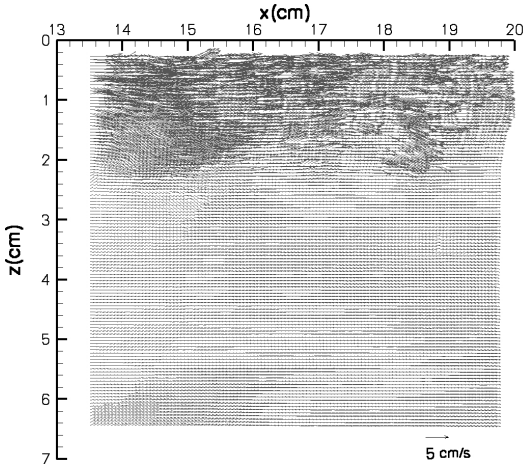

FIG. 4: An instantaneous velocity field from PIV measurement.

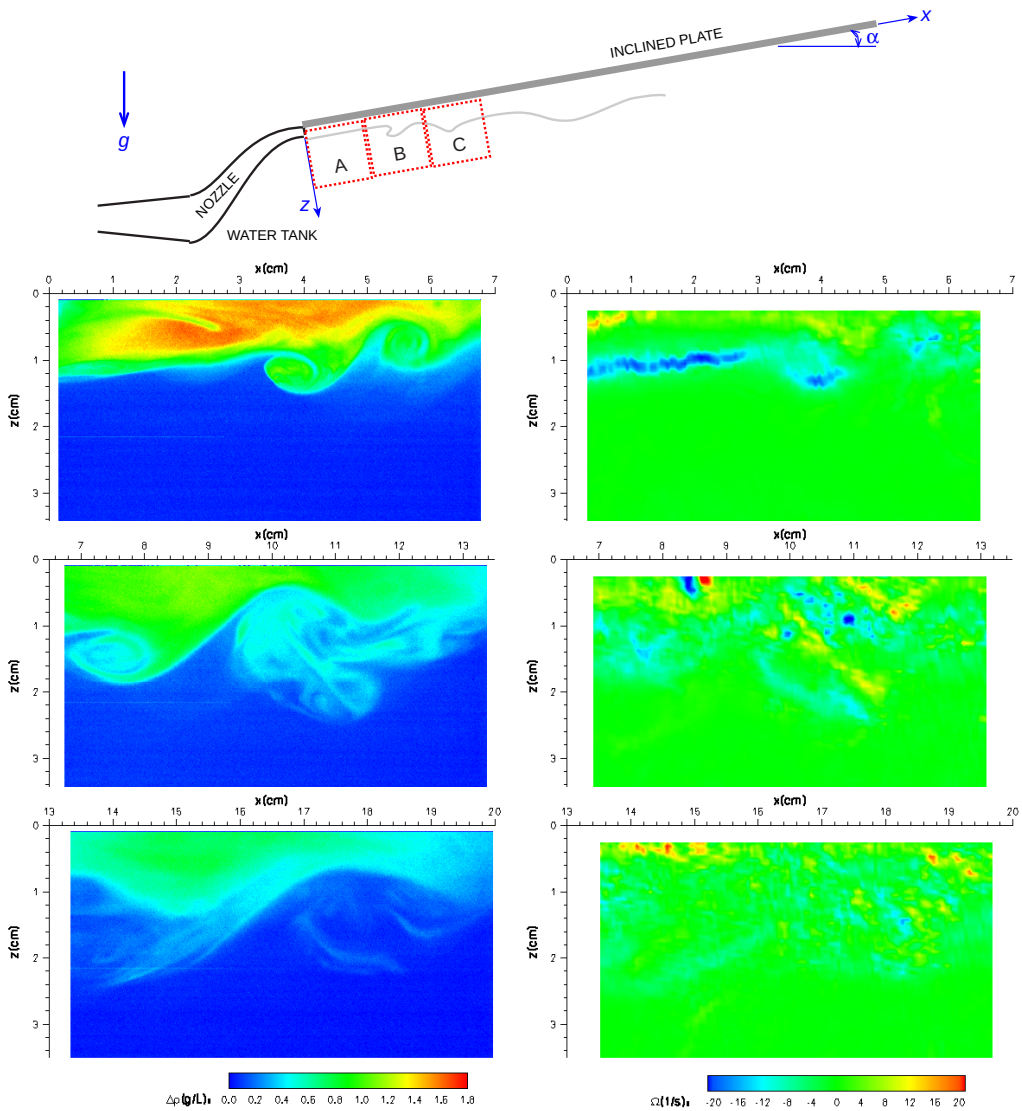

FIG. 5: Snapshots of density (left) and vorticity (right) at three different downstream locations. The data are acquired at three different batches of measurements. Plots from top to bottom are corresponding to locations A, B, and C, respectively.