ETH zürich

Modeling Frameworks for Future Energy Systems

Göran Andersson
Power System Laboratory, ETH Zürich

Outline

- Introduction & Motivation
- Energy Hubs
- Power Nodes
- Other Models
- Concluding Remarks

History of Challenges of the Power System

The First Challenge of Electric Power Engineering

1880 – 1920: To make it work

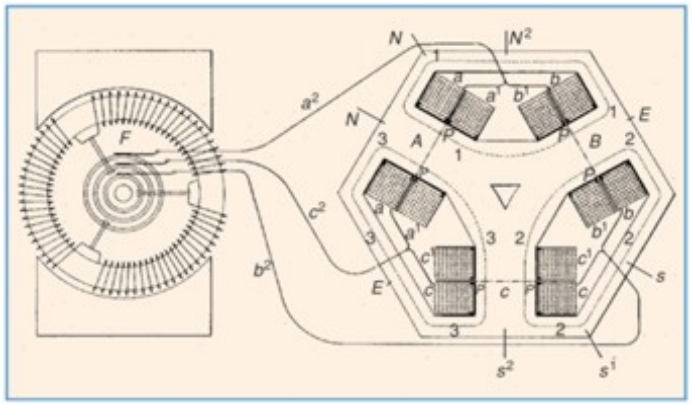

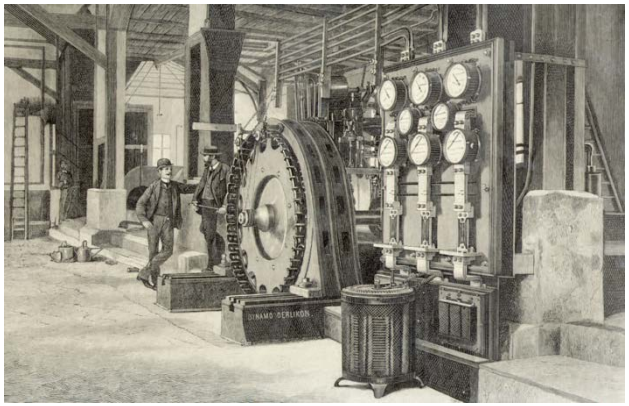

The Second Challenge of Electric Power Engineering

1920 – 1990: To make it big

To make it big (1000 kV, China 2008)

The Third Challenge of Electric Power Engineering

1990 - : To make it sustainable

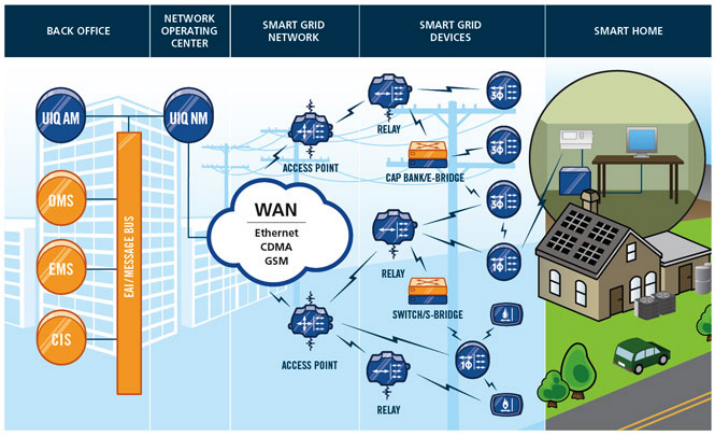

About Planning the Future

- *“Plans are useless, but planning is indispensable.”*

  Dwight D. Eisenhower

Complexity of Power Systems

Complexity along several dimensions

- **Time** — **(milli)seconds** (e.g. frequency inertia, frequency&voltage control), **minutes** (e.g. secondary/tertiary frequency&voltage control), **hours/days** (e.g. spot market-based plant/storage scheduling), **months/years** (e.g. seasonal storage, infrastructure planning).

- **Space** — **1‘000+ km**, e.g. interconnected continental European grid (Portugal – Poland: 3‘600 km, Denmark – Sicily: 3‘000 km).

- **Hierarchy** — **from distribution grid** (e.g. 120/240 V, 10 kV) **to high-voltage transmission grid** (220/380/500/… kV, AC and DC).

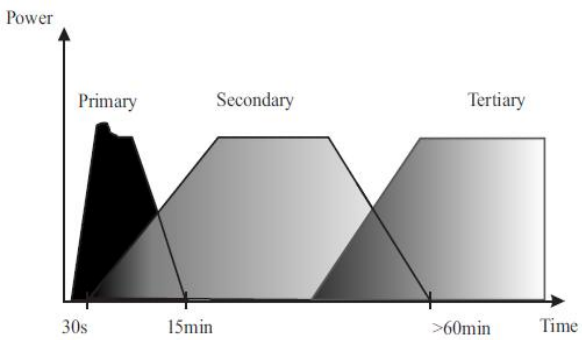

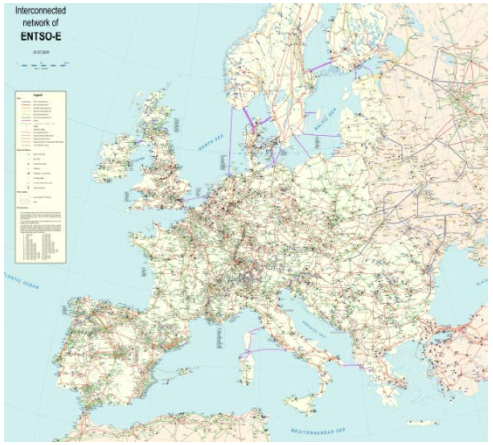

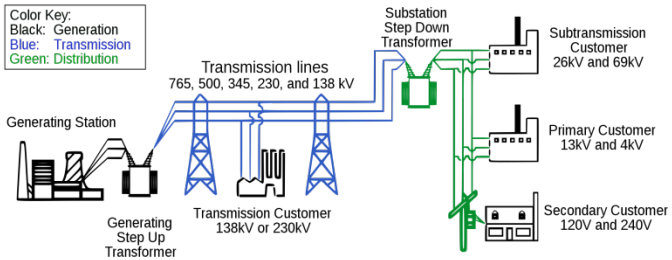

The grid frequency – A key indicator of the state of the system

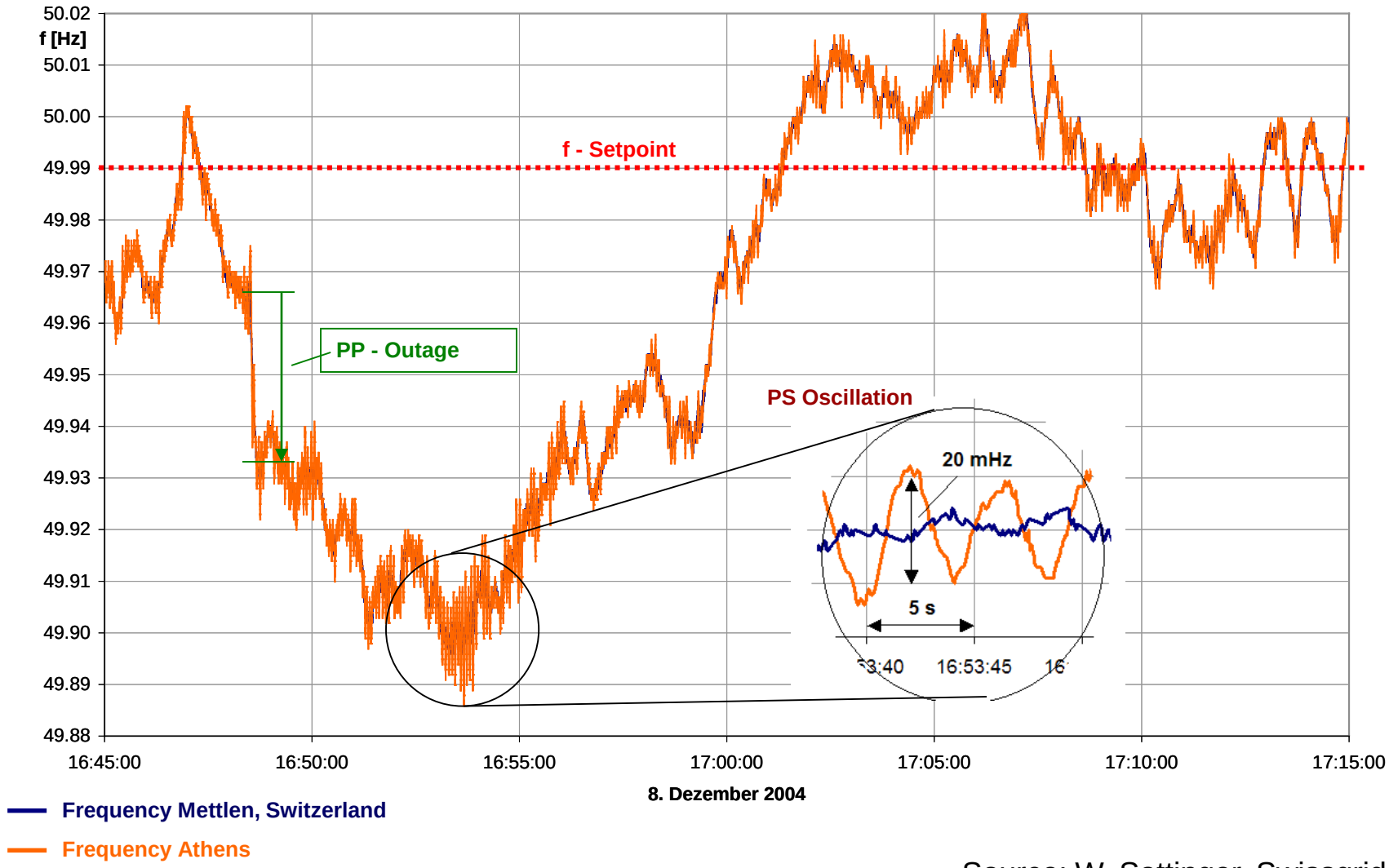

Source: W. Sattinger, Swissgrid

Spectrum of the system frequency and the AGC signal

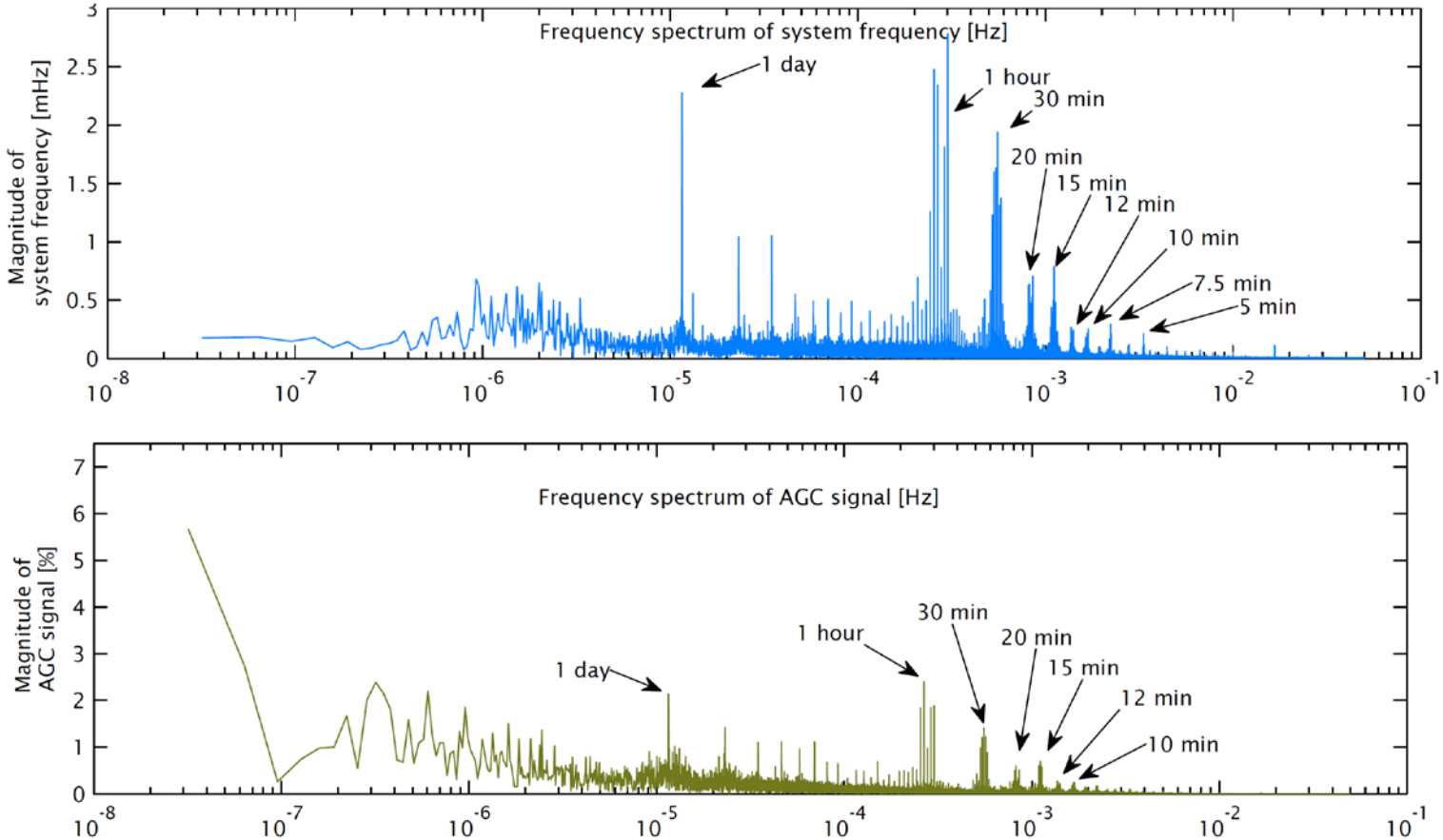

Figure 1. Spectrum of the system frequency and the AGC signal

Source: A new frequency control reserve framework based on energy-constrained units (Borsche, Ulbig, Andersson, PSCC 2014)

Trends and Challenges

Increasing fluctuating RES deployment = Fluctuating power in-feed

- Germany 2012: (Wind+PV) **63.9 GW power capacity** ≈ 75% of fully dispatchable fossil generation. **77.1 TWh energy produced** ≈ 15.2% of final electricity consumption.
- Wind+PV: *Still* mostly uncontrolled power feed-in – Hydro: «well»-predictable power feed-in.

Mitigation Options

- Improvement of Controllability: Implementation of Wind/PV curtailment in some countries.
- Improvement of Observability: More measurements and better predictions of PV and wind power feed-in (state estimation & prediction).

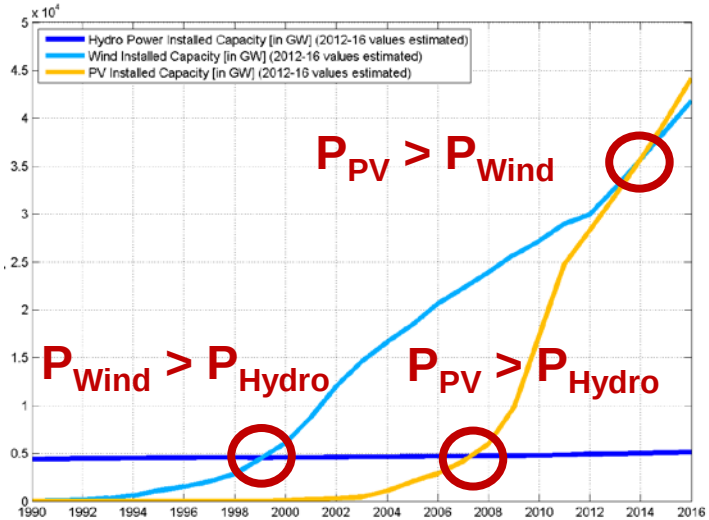

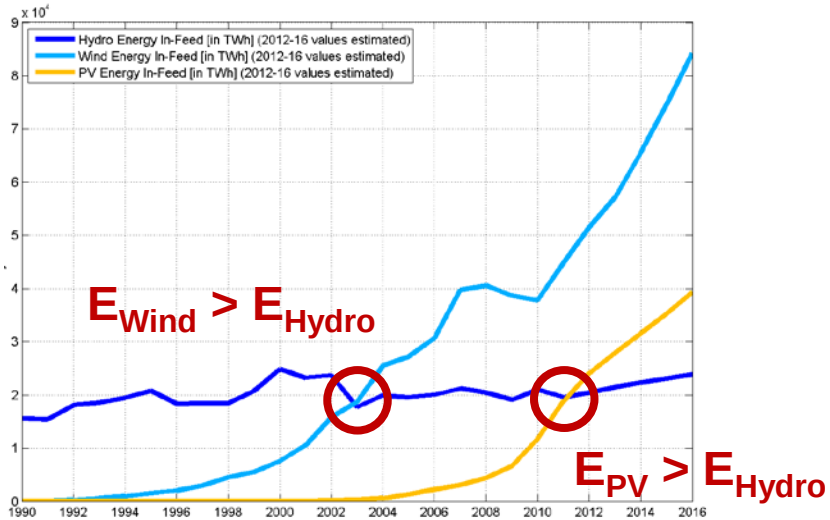

Sources: BaSt 2012, IEA Electricity Information 2011, BMU AGEE 2013, own calculations

PRESENT & FUTURE – high RES shares & *Smart Grid Vision*

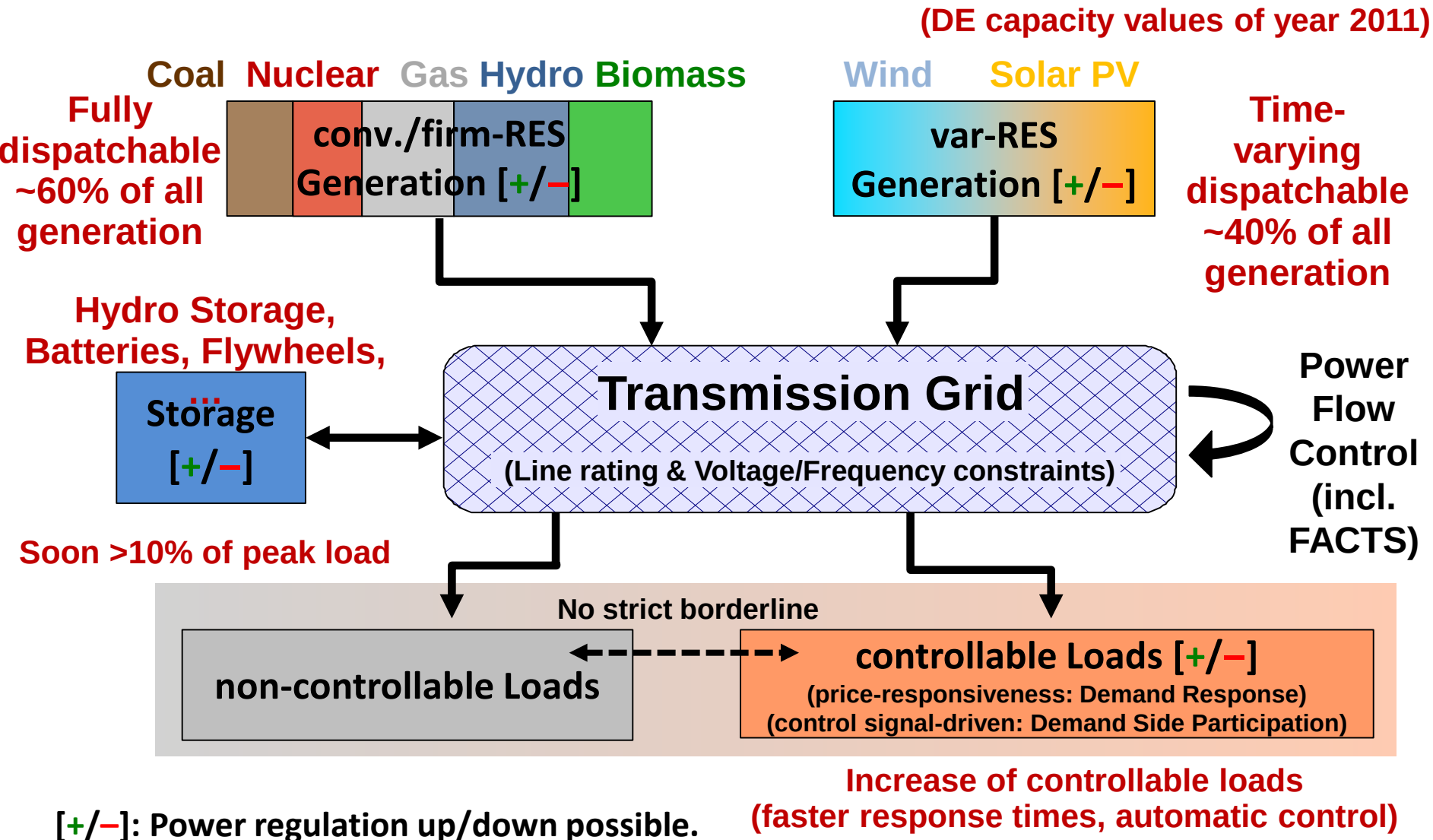

[+/–]: Power regulation up/down possible.

Energy Hubs

- ETH Zürich: Michèle Arnold, Martin Geidl, Florian Kienzle, Gaudenz Koeppel, Thilo Krause, …
- University of Michigan: Mads Almassalkhi, Ian Hiskens

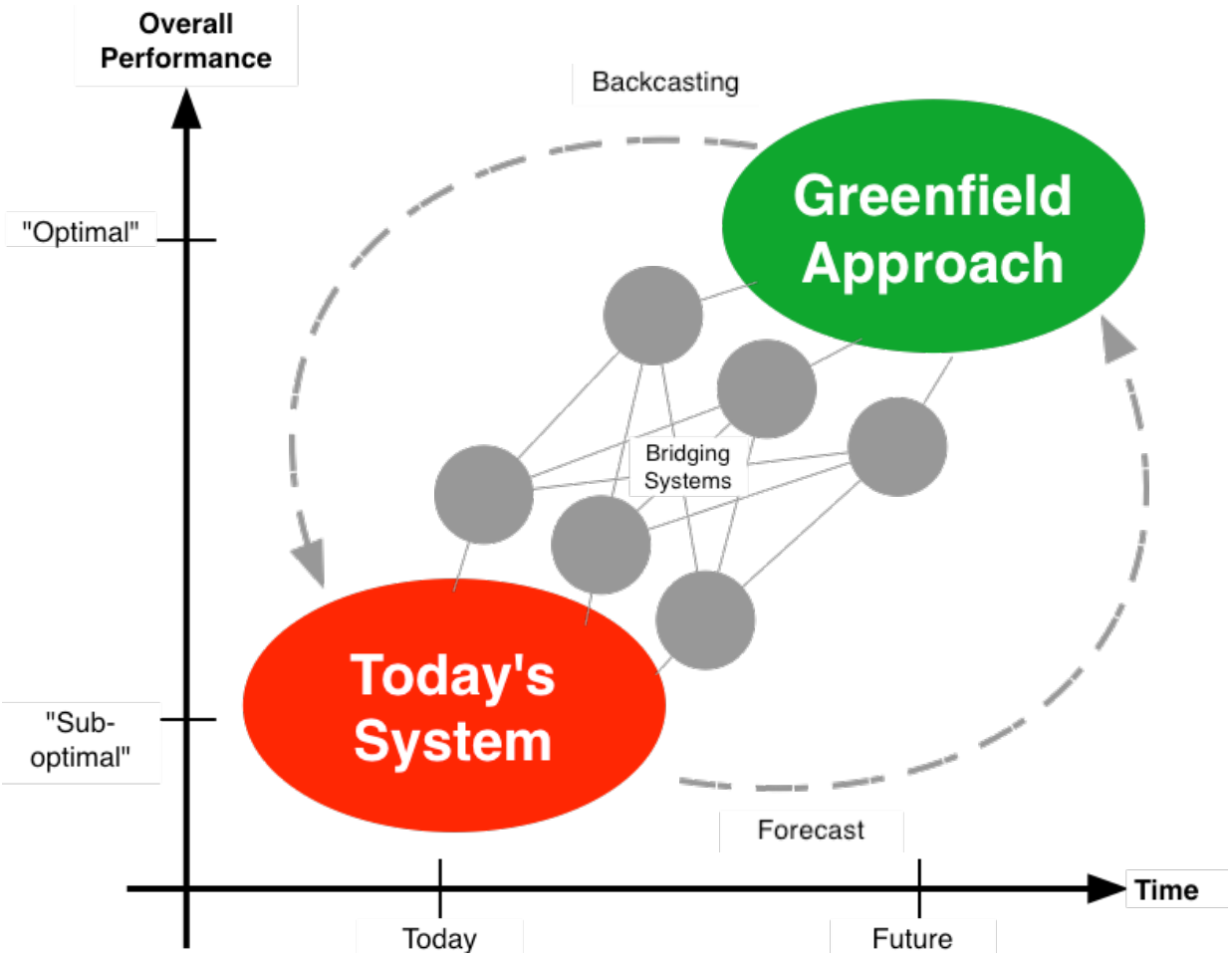
Overall Performance
Backcasting
Greenfield Approach
"Optimal"
Bridging Systems
Today's System
"Sub-optimal"
Forecast
Time
Today
Future

The Energy Hub – A Key Element

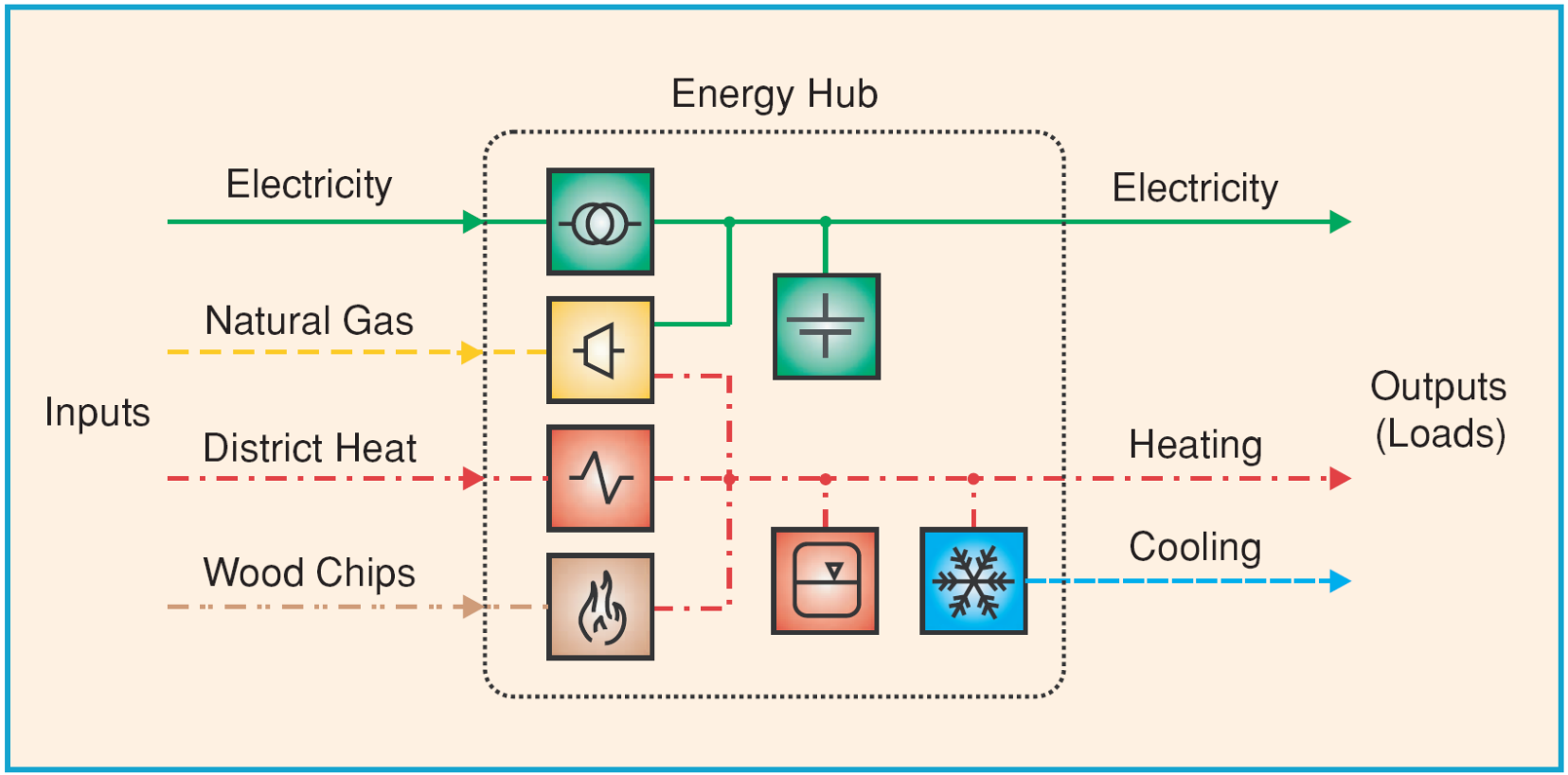

Modeling the Energy Hub

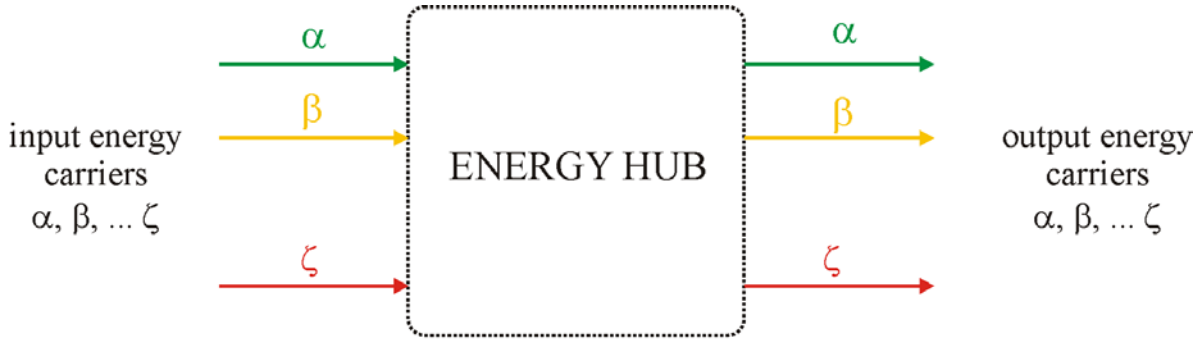

$$\begin{bmatrix} P^{\alpha}_{out} \\ P^{\beta}_{out} \\ \vdots \\ P^{\zeta}_{out} \end{bmatrix} = \begin{bmatrix} c_{\alpha\alpha} & c_{\beta\alpha} & \cdots & c_{\zeta\alpha} \\ c_{\alpha\beta} & c_{\beta\beta} & \cdots & c_{\zeta\beta} \\ \vdots & \vdots & \ddots & \vdots \\ c_{\alpha\zeta} & c_{\beta\zeta} & \cdots & c_{\zeta\zeta} \end{bmatrix} \begin{bmatrix} P^{\alpha}_{in} \\ P^{\beta}_{in} \\ \vdots \\ P^{\zeta}_{in} \end{bmatrix}$$

output power vector — coupling matrix — input power vector

Motivation for Energy Hub Modelling

- Conversion between different energy carriers, e.g. natural gas into electricity and heat, establishes input-output coupling of power (and energy) flows.

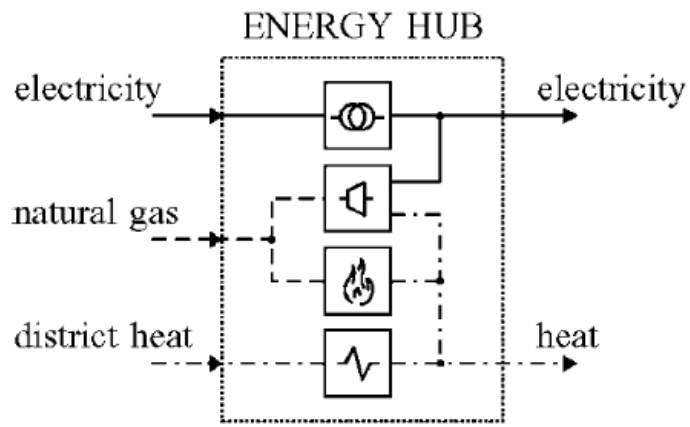

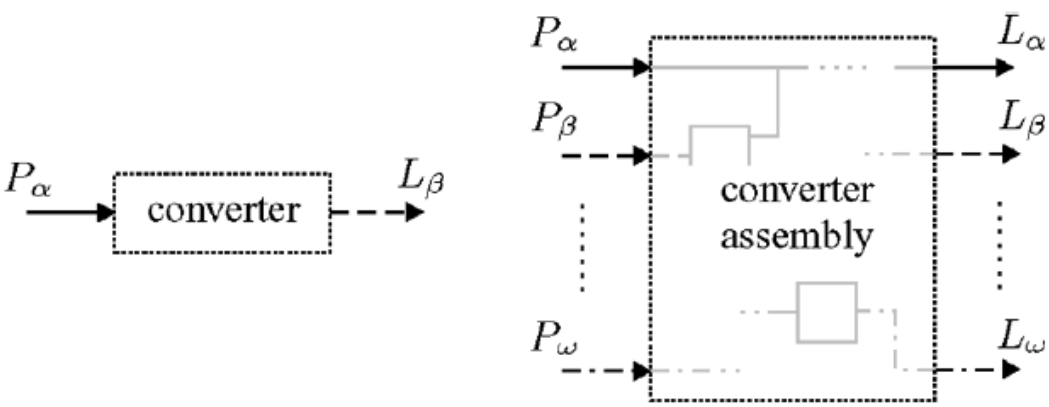

Conversion Matrix C

$$\mathbf{L} + \mathbf{M} = \mathbf{C}\left[\ \mathbf{P} - \mathbf{Q}\ \right]$$

L = Loads (Output)

M = Output side storage flows

C = Coupling matrix

P = Input power flows

Q = Input storage flows

- **Power conversion ⇔ price conversion**

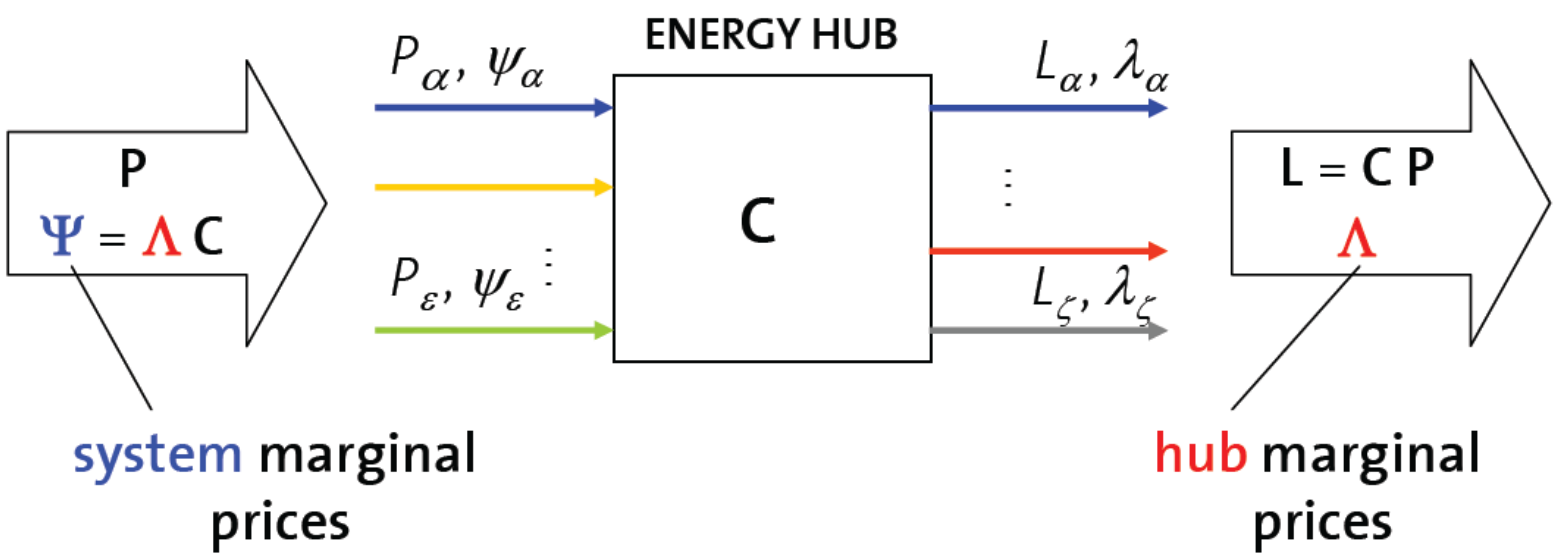

Modeling of Energy Networks – Energy Hubs

- Energy Hub concept allows unified modelling of energy networks and resulting synergies of electricity networks ($\mathbf{P_{el}}$, $\mathbf{E_{el}}$), natural gas networks ($\mathbf{P_{gas}}$, $\mathbf{E_{gas}}$) and district heat networks ($\mathbf{P_{heat}}$, $\mathbf{E_{heat}}$)

- Energy Hub concept allows analysis and optimization of investment optimality, operation efficiency and operation reliability.

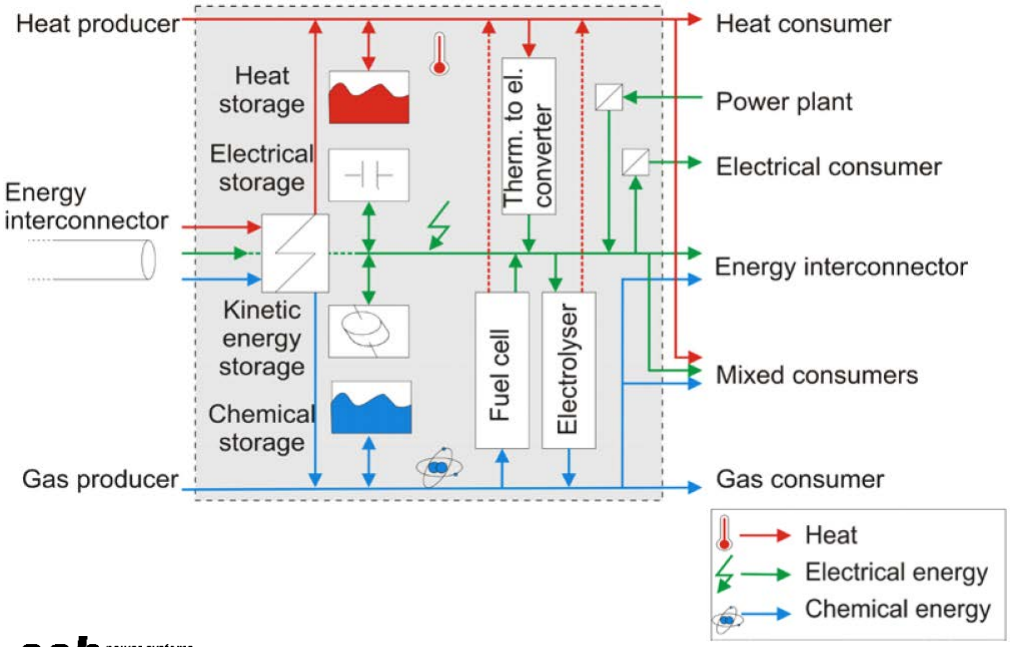

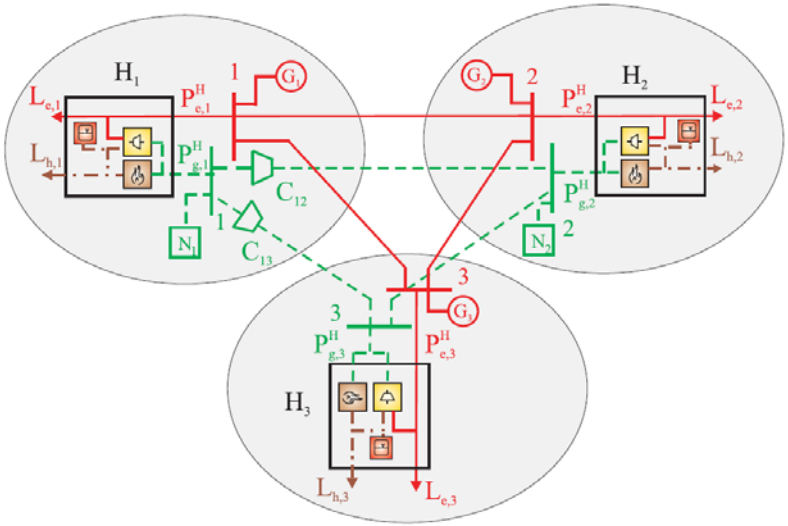

Geidl, Andersson et al., 2007 and 2008

- **Multi-period Optimal Dispatch (MPOD) of hub systems**
  - *Minimize energy costs in system*
    - Also includes penalty on load control and wind curtailment
  - *Subject to*
    - Energy hub flows, limits on hub elements
    - Hub storage integrator dynamics, limits on storage devices
    - Physics of power flow, limits on network elements
    - Forecasted energy demand, fuel costs, and renewable

  - Solution represents **optimal energy schedule** over MP horizon
  - Similar to economic dispatch in electric power systems
    - Energy storage enforces tighter coupling between time-steps

- **<u>HUBERT</u>- automated simulation of arbitrarily large hub systems**

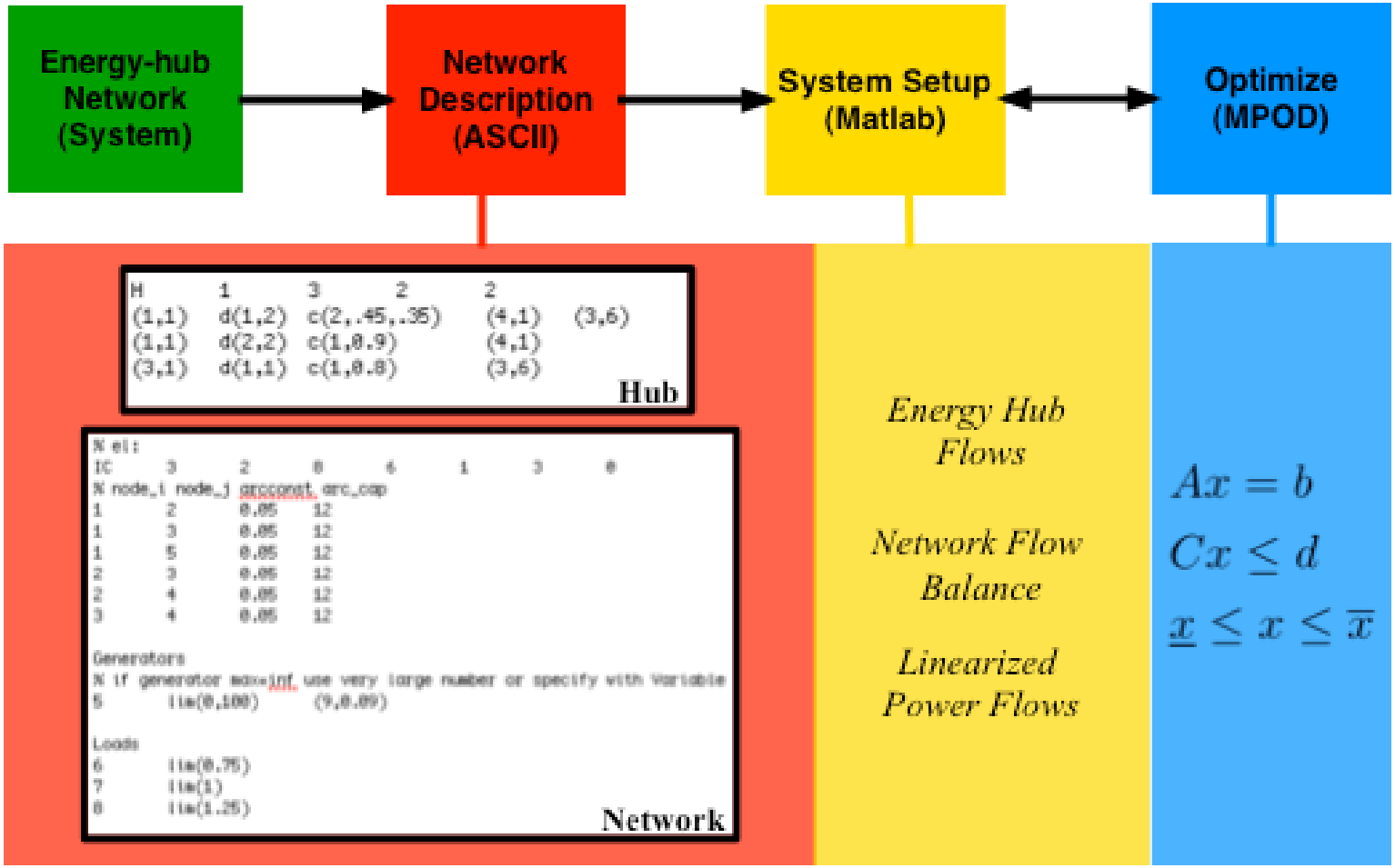

From Mads Almassalkhi

Some Applications

- Long term energy planning of the city of Bern
- Energy planning of several Swiss municipalities
- Analysis of e-mobility
- Energy/Exergy analysis of cities of Zürich and Geneva
- Long term energy network expansion in Europe
- Energy efficiency studies of airports, harbours, etc in Europe (EPICAP)

Influence of Prediction Horizon

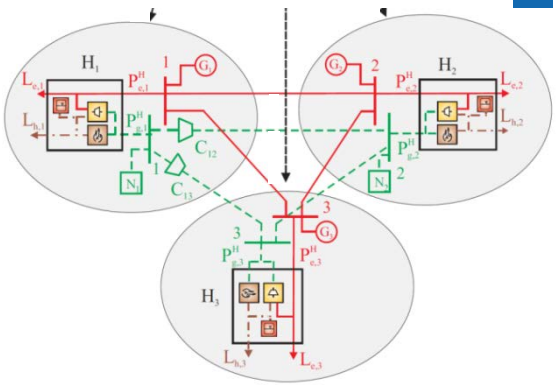

Load Profiles: Electricity and Heat

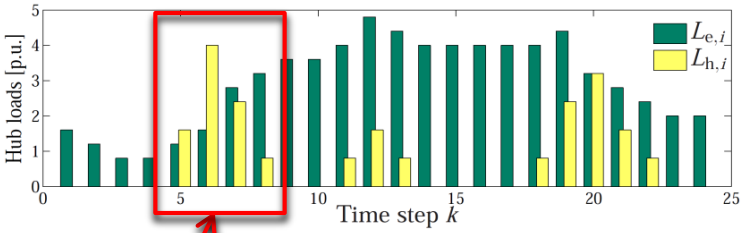

SOC Heat Storage

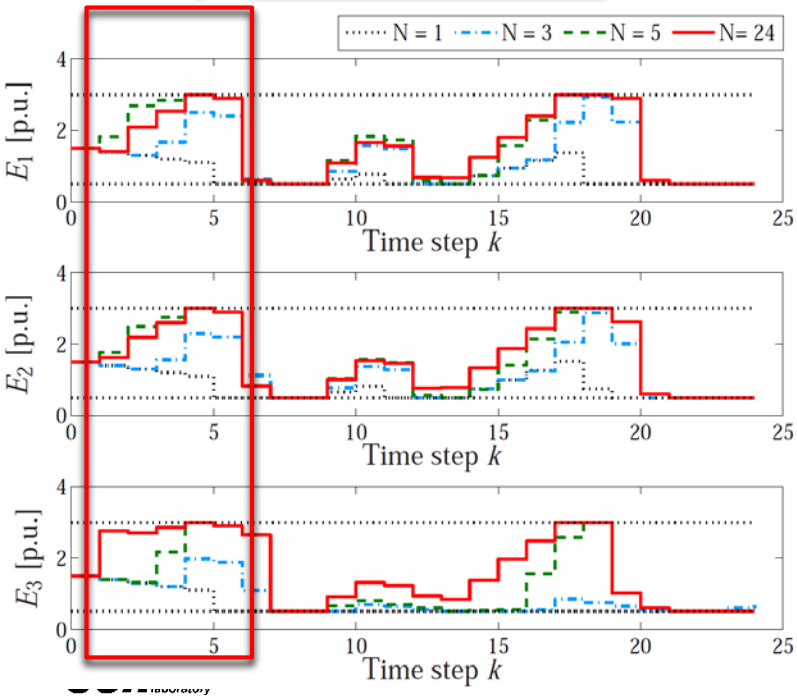

- Operation of heat storage dependent on heat load and CHP operation

Costs

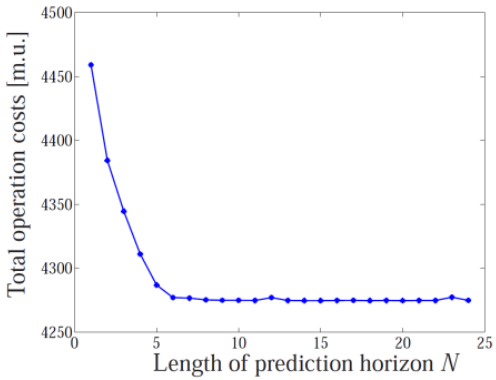

Computational Effort

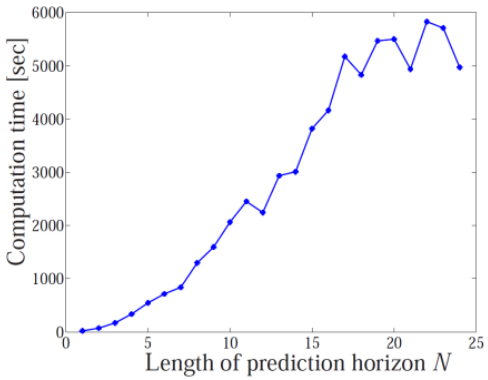

Energy hub optimization

- **Simulating large multi-energy systems**
  - Example: 102 energy hubs,
    - electric + natural gas networks & wind farms + heating loads

Break-even time

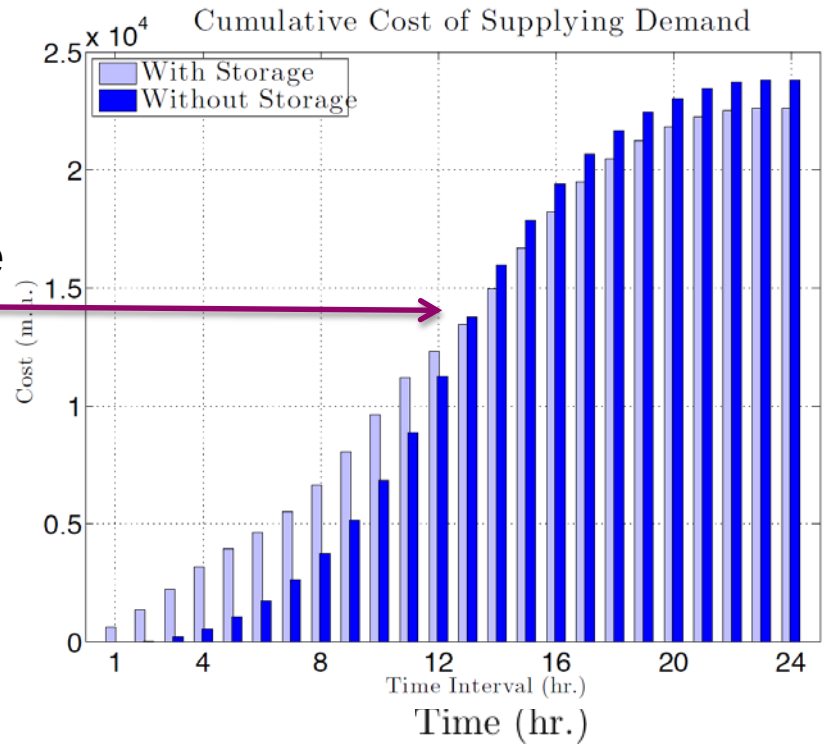

Economic benefits of storage

From Mads Almassalkhi

Power Nodes Framework

Kai Heussen (DTU)
Stephan Koch
Andreas Ulbig
...

Power Node Modeling Approach

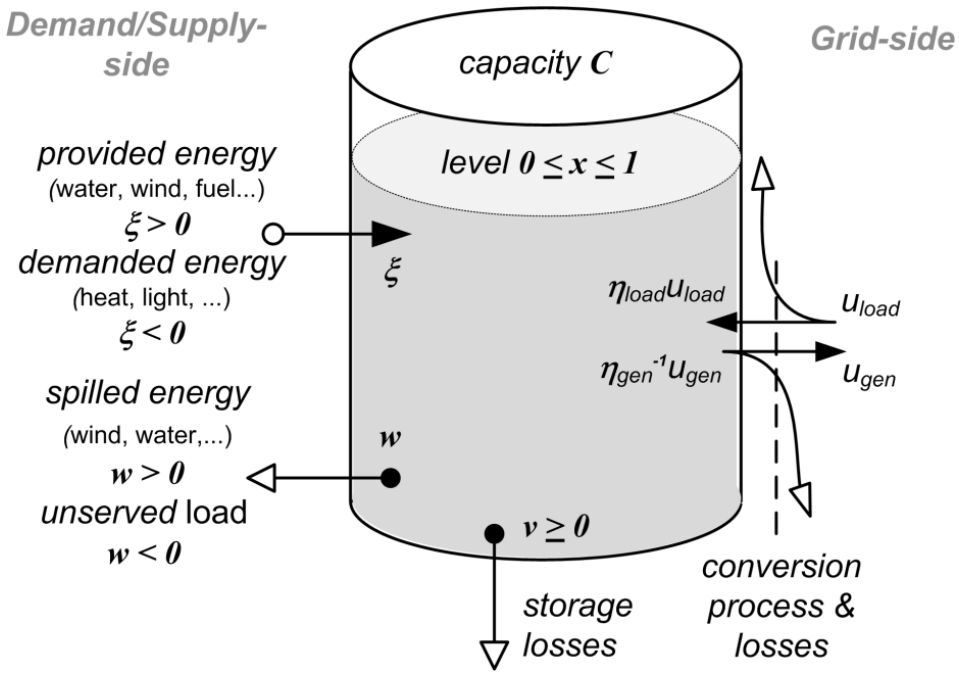

State-Descriptor Form

$$C_{SOC,i}\dot{x}_i = a_i x_i + b_i^T \underline{u}$$

$$C_i \dot{x}_i = \eta_{\mathrm{load}_i} u_{\mathrm{load}_i} - \eta_{\mathrm{gen}_i}^{-1} u_{\mathrm{gen}_i} + \xi_i - w_i - v_i$$

Power Node Modeling Approach

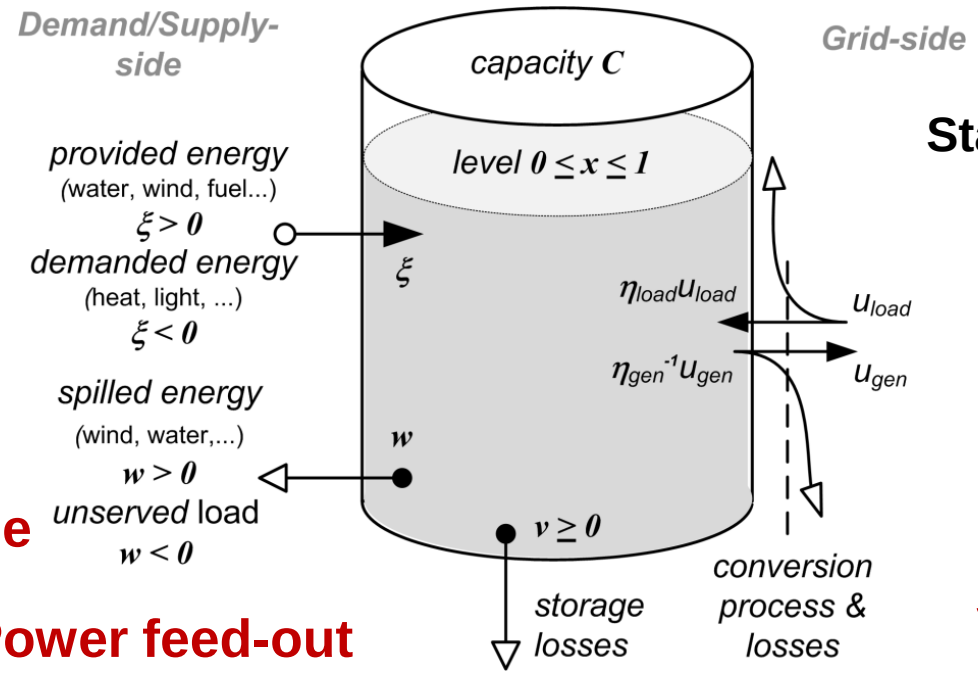

State-Descriptor Form

$$C_{SOC,i}\dot{x}_i = a_i x_i + b_i^T \underline{u}$$

Storage capacity × state-of-charge (SOC)

Internal storage losses v(x)

Shedding term

Power feed-out from grid

Power feed-in to grid

$$C_i \dot{x}_i = \eta_{\mathrm{load}_i} u_{\mathrm{load}_i} - \eta_{\mathrm{gen}_i}^{-1} u_{\mathrm{gen}_i} + \xi_i - w_i - v_i$$

Efficiency factors

Provided / demanded power

Examples of Power Node Definitions

General formulation: $$C_i \dot{x}_i = \eta_{\text{load}_i} u_{\text{load}_i} - \eta_{\text{gen}_i}^{-1} u_{\text{gen}_i} + \xi_i - w_i - v_i$$

Combined Heat/ Power Plant(CHP), Berlin-Mitte

- **Fully dispatchable generation**
- **No load, no storage (C)**
- **Fuel: natural gas ($\xi>0$)**

$$\eta_{\text{gen}_i}^{-1} u_{\text{gen}_i} = \xi_i$$

Offshore Wind Farm, Denmark

- **Time-dependent dispatchable generation, if wind blows, $\xi \geq 0$, and if energy waste term $w \geq 0$**
- **No load, no storage (C)**
- **Fuel: wind power ($\xi>0$)**

$$\eta_{\text{gen}_i}^{-1} u_{\text{gen}_i} = \xi_i - w_i$$

Examples of Power Node Definitions

General formulation: $$C_i \dot{x}_i = \eta_{\text{load}_i} u_{\text{load}_i} - \eta_{\text{gen}_i}^{-1} u_{\text{gen}_i} + \xi_i - w_i - v_i$$

Residential electric water heaters

- Time-dependent dispatchable load (heating element)
- Constrained "storage" ($C \approx 10\ kWh$)
- Demand: hot water, daily pattern ($\xi < 0$), internal heat loss ($v > 0$)

$$C_i \dot{x}_i = \eta_{\text{load}_i} u_{\text{load}_i} + \xi_i - v_i$$

Plug-In (Hybrid) Electric Vehicle (PHEV/EV)

- Dispatchable generation & load
- Battery storage ($C \approx 10\text{-}20\ kWh$), very small losses ($v \approx 0$)
- Demand: driving profile ($\xi < 0$), EV: ($w = 0$)
- PHEV: Substitute electricity by fuel ($w \geq 0$)

Charging only: $$C_i \dot{x}_i = \eta_{\text{load}_i} u_{\text{load}_i} + \xi_i$$

Full V2G support: $$C_i \dot{x}_i = \eta_{\text{load}_i} u_{\text{load}_i} - \eta_{\text{gen}_i}^{-1} u_{\text{gen}_i} + \xi_i - w_i$$

Examples of Power Node Definitions

General formulation: $C_i \dot{x}_i = \eta_{\text{load}_i} u_{\text{load}_i} - \eta_{\text{gen}_i}^{-1} u_{\text{gen}_i} + \xi_i - w_i - v_i$

Goldisthal Hydro Pumped Storage, Germany

- **Fully dispatchable generation (turbine) and load (pump)**
- **Constrained storage ($C \approx 8$ GWh)**
- **Fuel: almost no water influx ($\xi \approx 0$)**

$$C_i \dot{x}_i = \eta_{\text{load}_i} u_{\text{load}_i} - \eta_{\text{gen}_i}^{-1} u_{\text{gen}_i}$$

Emossion Storage Lake, Switzerland

- **Fully dispatchable generation (turbine), but no load (pump)**
- **Large storage ($C \approx 1000$ GWh)**
- **Fuel supply: rain, snow melting ($\xi > 0$)**

$$C_i \dot{x}_i = -\eta_{\text{gen}_i}^{-1} u_{\text{gen}_i} + \xi_i$$

Examples of Power Node Definitions

General formulation: $$C_i \dot{x}_i = \eta_{\text{load}_i} u_{\text{load}_i} - \eta_{\text{gen}_i}^{-1} u_{\text{gen}_i} + \xi_i - w_i - v_i$$

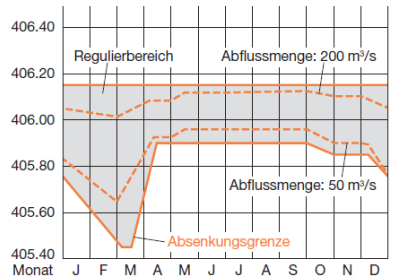

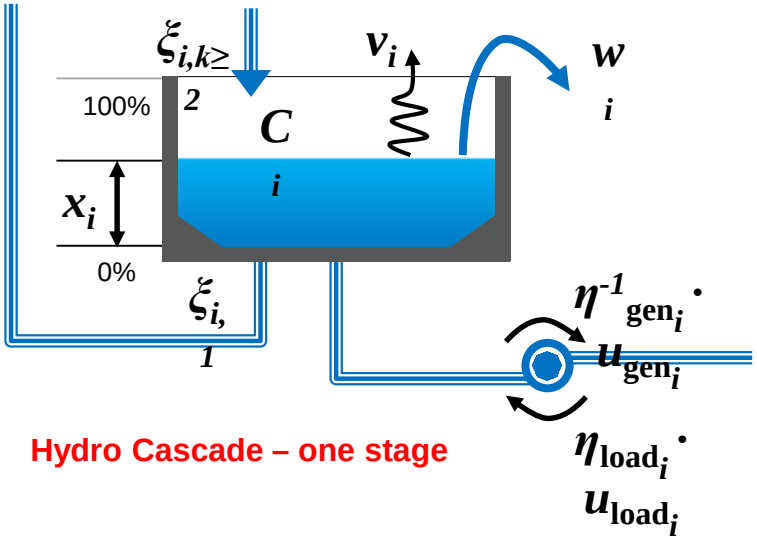

Hydro Cascade – one stage

- **Dispatchable generation, but no load**
- **Storage function dependent on geography, $C \in [0, \ldots, GWh, TWh]$**
- **Fuel (ξ): water influx from river, ($\xi > 0$)**
- **Waste (w): water flow over barrage (high water-level) or intentional water diversion**

$$C_i \dot{x}_i = -\eta_{\text{gen}_i}^{-1} u_{\text{gen}_i} + \xi_i^{\text{water inflow}} - w_i$$

- **Dispatchable generation and load**
- **Constrained storage ($C \approx GWh$ range)**
- **Fuel ($\xi_{i,k}$): water influx from upper basin and other inflows ($\xi_{i,k\geq 2}$)**
- **Waste (w): water discharge into lower basin (or river)**
- **Loss (v): evaporation from bassin**

$$C_i \dot{x}_i = \eta_{\text{load}_i} u_{\text{load}_i} - \eta_{\text{gen}_i}^{-1} u_{\text{gen}_i} + \sum_k \xi_{i,k} - w_i - v_i$$

Power Nodes Simulations – Predictive Power Dispatch

$$
\begin{aligned}
\min J(k) \quad = \quad & \sum_{l=k}^{l=k+N-1} (x(l)-x_{ref})^T \cdot Q_x \cdot (x(l)-x_{ref}) \\
& +u(l)^T \cdot Q_u \cdot u(l) + R_u \cdot u(l) \\
& +\delta u(l)^T \cdot \delta Q_u \cdot \delta u(l) \\
\text{s.t.} \quad \text{(a)} \quad & x(l+1) = A \cdot x(l) + B \cdot u(l) \\
\text{(b)} \quad & 0 \leq x^{min} \leq x(l) \leq x^{max} \leq 1 \\
\text{(c)} \quad & 0 \leq u^{min} \leq u(l) \leq u^{max} \\
\text{(d)} \quad & \delta u^{min} \leq \delta u(l) \leq \delta u^{max} \\
\text{(e)} \quad & \xi_1(l) = \xi_{drv,1}(l \cdot T) \\
\text{(f)} \quad & \xi_2(l) = \xi_{drv,2}(l \cdot T) \\
\text{(g)} \quad & \xi_3(l) = \xi_{drv,3}(l \cdot T) \\
\text{(h)} \quad & \xi_7(l) = \xi_{drv,7}(l \cdot T) \\
\text{(i)} \quad & u_{gen,4}(l) \cdot u_{load,4}(l) = 0 \\
\text{(j)} \quad & u_{gen,5}(l) \cdot u_{load,5}(l) = 0 \\
\text{(k)} \quad & \sum_{i=\{2,3,4,5,6\}} u_{gen,i}(l) - \sum_{i=\{1,4,5,7\}} u_{load,i}(l) = 0 \\
\text{(a-k)} \quad & \forall l = \{k, \ldots, k+N-1\}
\end{aligned}
$$

- **Unit Commitment (UC) or Optimal Power Flow (OPF) including energy storage units**
- Demand and RES power in-feed forecasts (perfect or imperfect)
- Optimisation based on marginal generation costs (+ ramping costs)
- **UC: Copperplate simplification**
- **OPF: Grid constraints included**
- In addition: Representation of transmission and distribution grid constraints (line capacity, voltage)
- **Implementation: Matlab, Yalmip**

Verification of the Power Node approach, 1

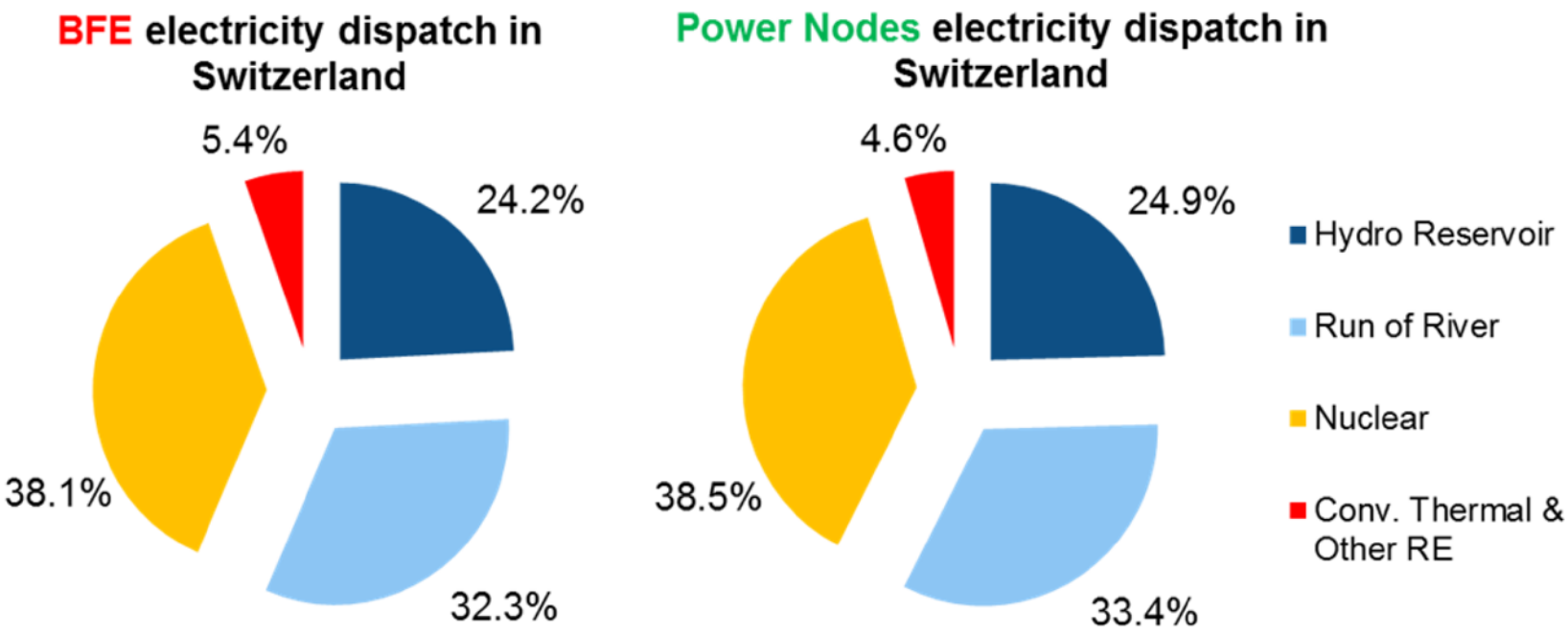

Figure 10 – BFE measurements [18] vs Power node dispatch in Switzerland in 2010.

Source: Swiss energy strategy 2050 and the consequences for electricity grid operation – full report (Comaty, Ulbig, Andersson, ETH 2014)

Verification of the Power Node approach, 2

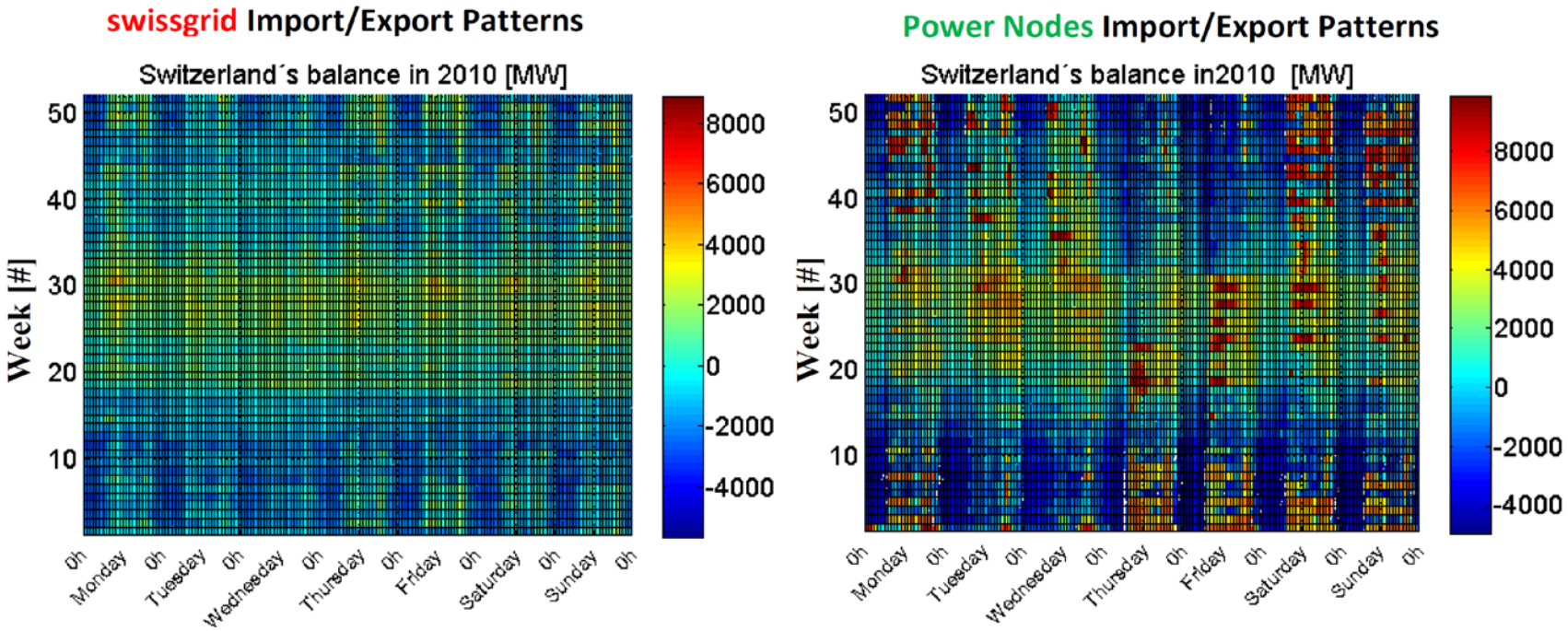

Figure 11 – Power Exchange Comparison between swissgrid Measurements and Power Node Dispatch.

BfE statistics: Import 32.9 TWh_e/a
Export 30.9 TWh_e/a

Power Node approach: Import 30.2 TWh_e/a
Export 36.6 TWh_e/a

Source: Swiss energy strategy 2050 and the consequences for electricity grid operation – full report (Comaty, Ulbig, Andersson, ETH 2014)

Simulation Results –

Predictive Power Dispatch (Case Study Germany)

- **Simulation Period** May 2010 (30% Wind, **50% PV, no DSP**)
- **High Temporal Resolution** $T_{pred.}$ = 72h, $T_{upd.}$ = 4h, T_{sample}= 15min.
- **Calculation Time ≈** 1min.

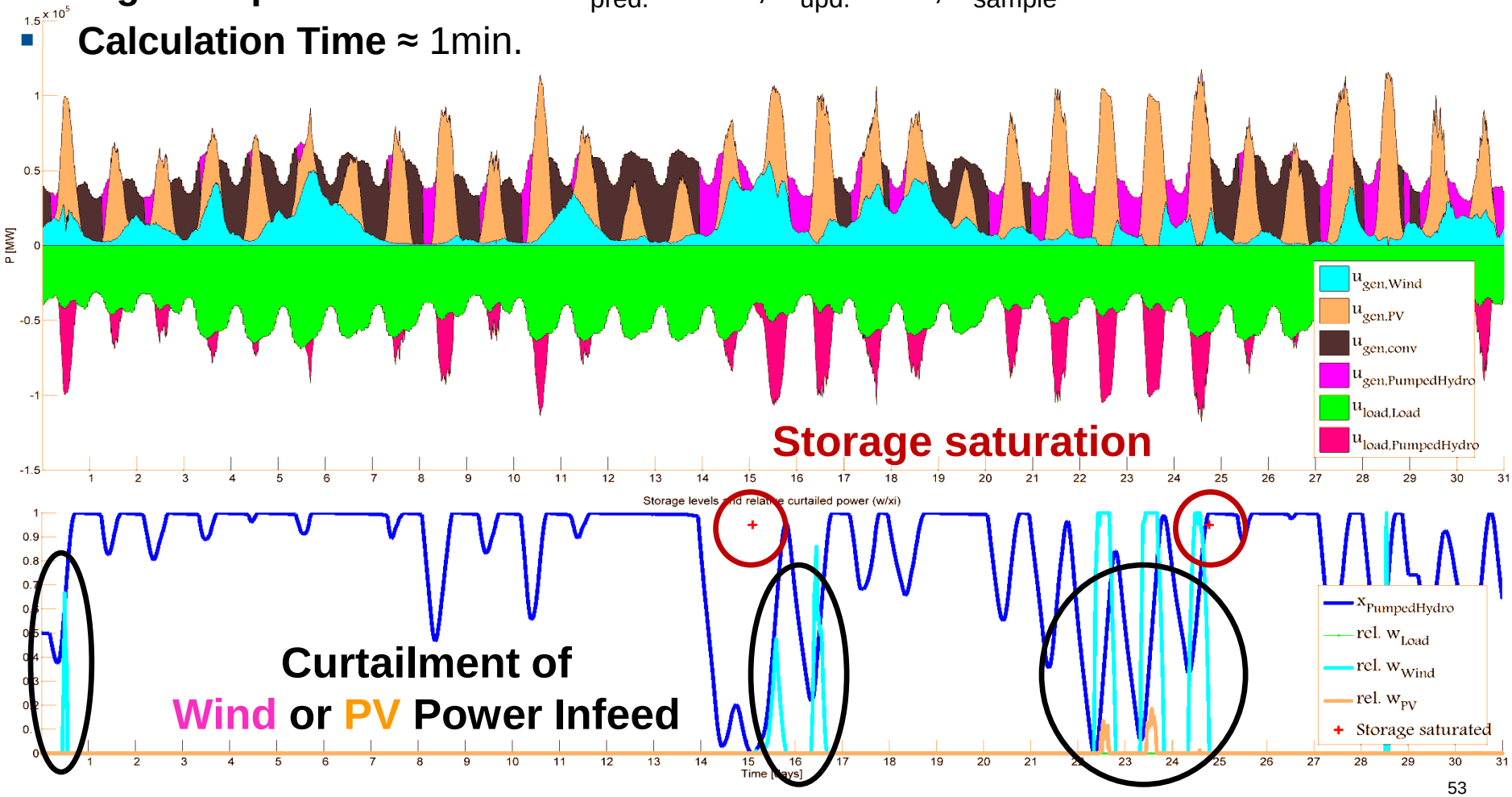

Assessment of Flexibility – Curtailed Renewable Energy in Germany

0-50% Wind Energy, 0-50% PV Energy, Full-Year 2011 simulations
only existing hydro storage, copperplate grid model, no export, no DSP

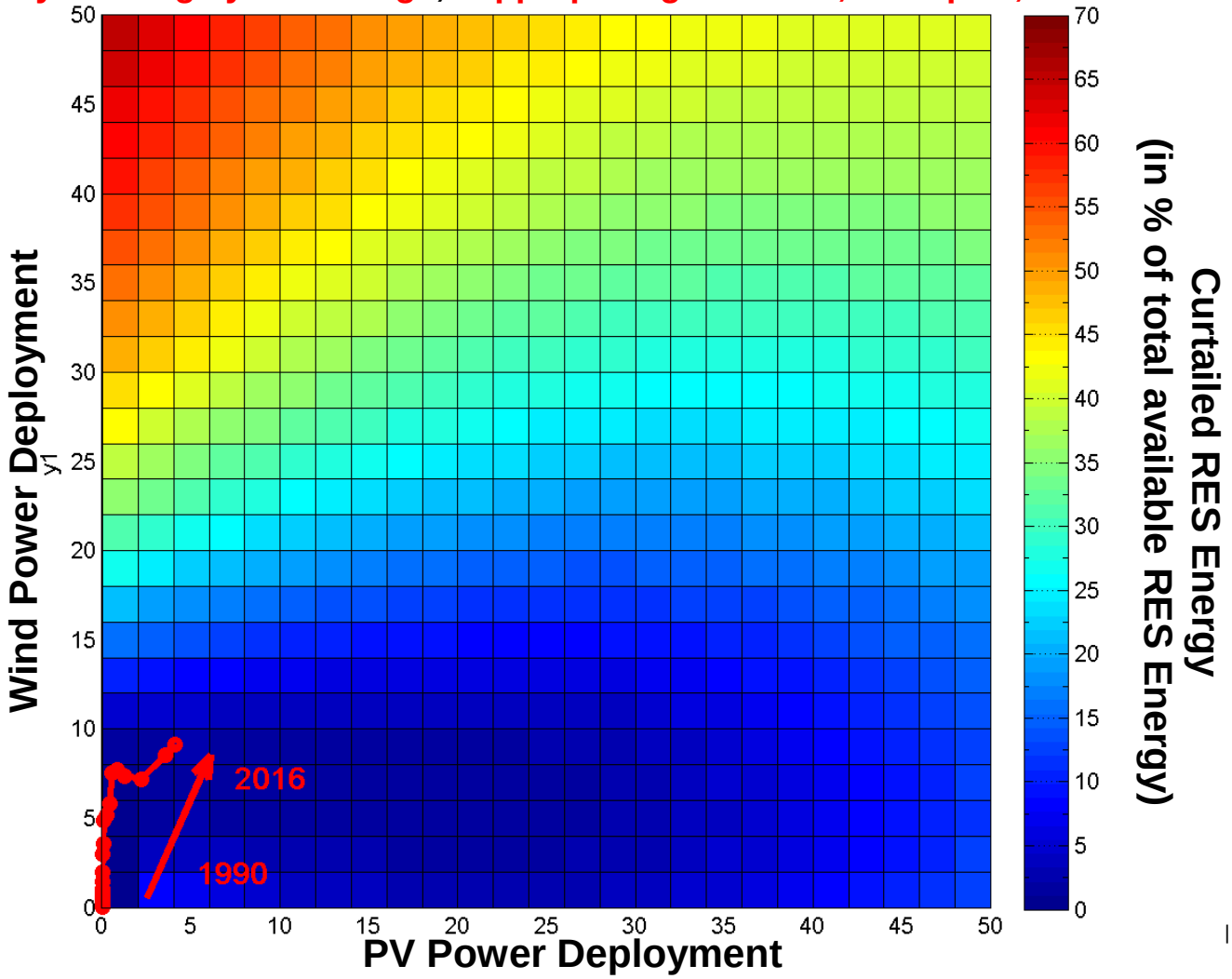

Assessment of Flexibility – Curtailed Renewable Energy in Germany

20% Wind Energy, 10% PV Energy (EU-NREAP Goals), Full-Year 2011 simulations
only existing hydro storage, copperplate grid model, no export, no DSP

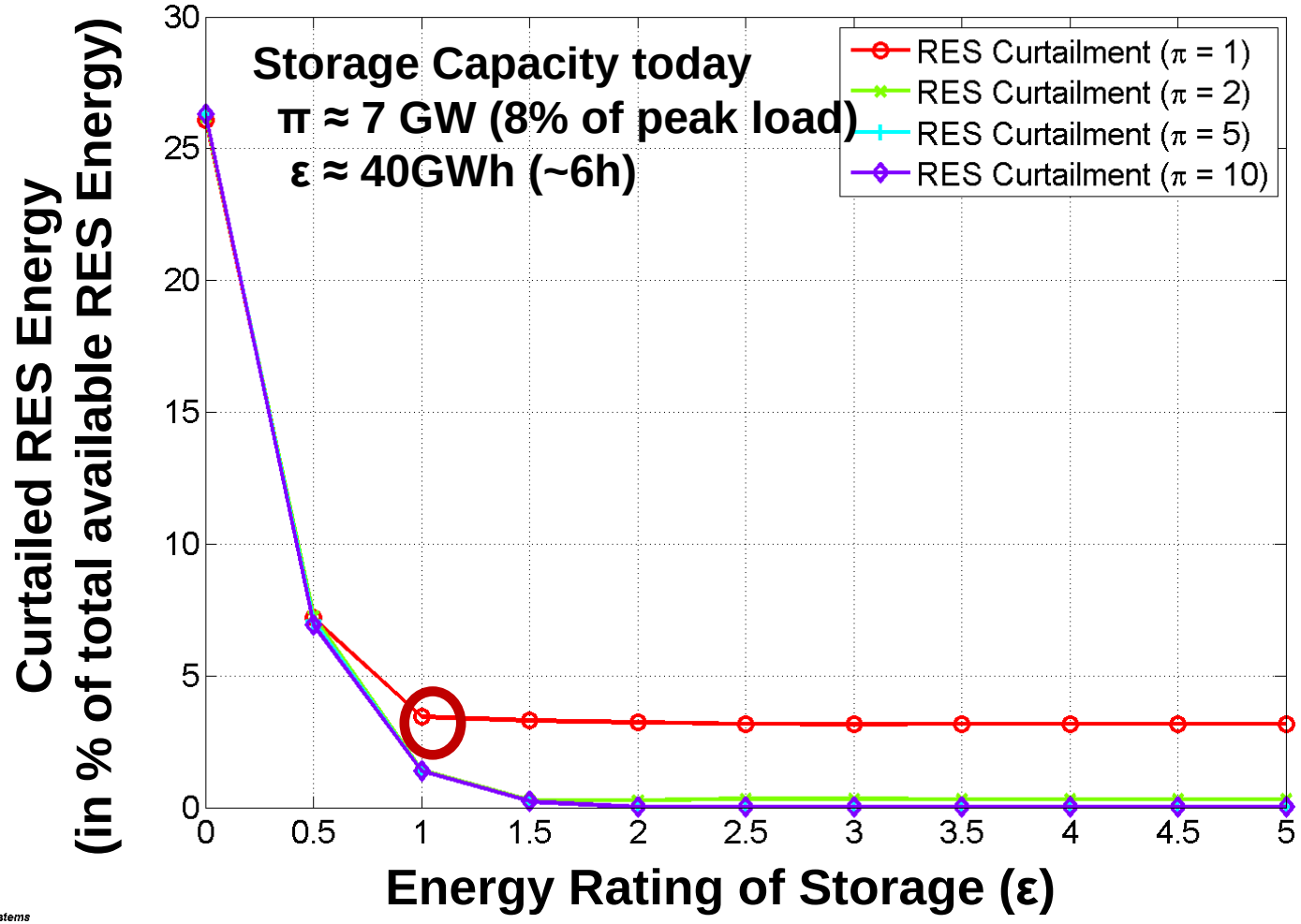

Why is a predictive dispatch optimization necessary?

- Strong impact of prediction horizon length (T_p) on dispatch performance visible.
- **Example** German power system (with varying wind/PV energy shares).
- **Simulation parameters** full-year 2010, 15min sampling time, **artificial pumped hydro storage capacity of 50x nominal values** (7GW/42 GWh nominal power/energy)
- Full-year simulations of 25 setups with varying wind/PV share

T_p = 1h **T_p = 12h** **T_p = 24h**

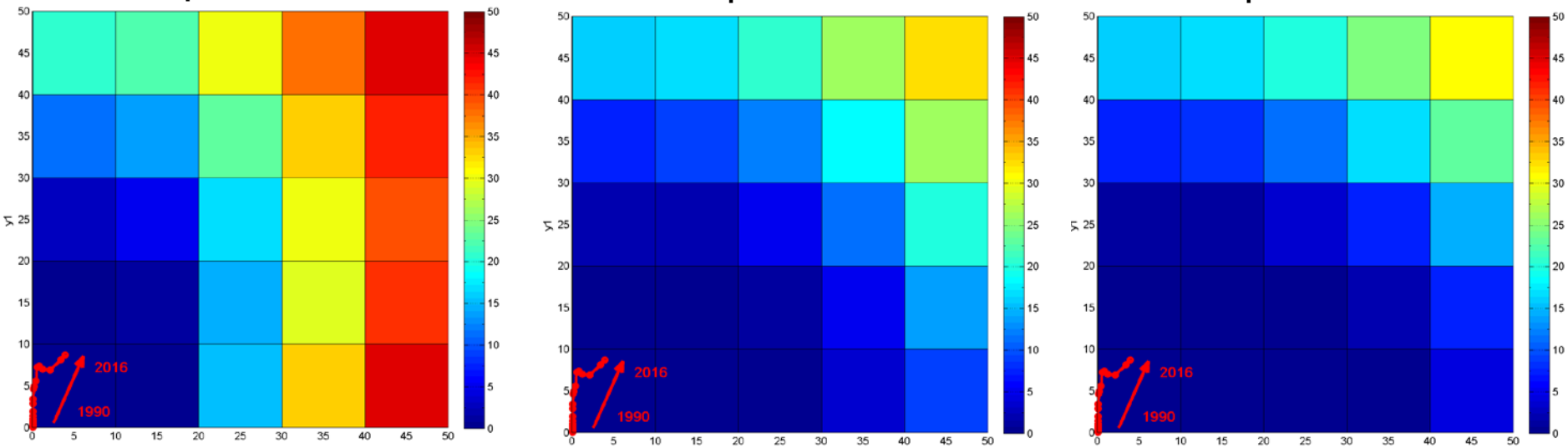

Figure description

– x-axis: [0, 5, 10, …, 50%] of PV energy share of total yearly load demand.
– y-axis: [0, 5, 10, …, 50%] of wind energy share of total yearly load demand.
– color coding: Curtailment of Wind&PV energy (dark blue: ≈0%, dark red: ≈50%).

A Comment on Volatility

Change of Load Flow Patterns in European Power System

Year 2010

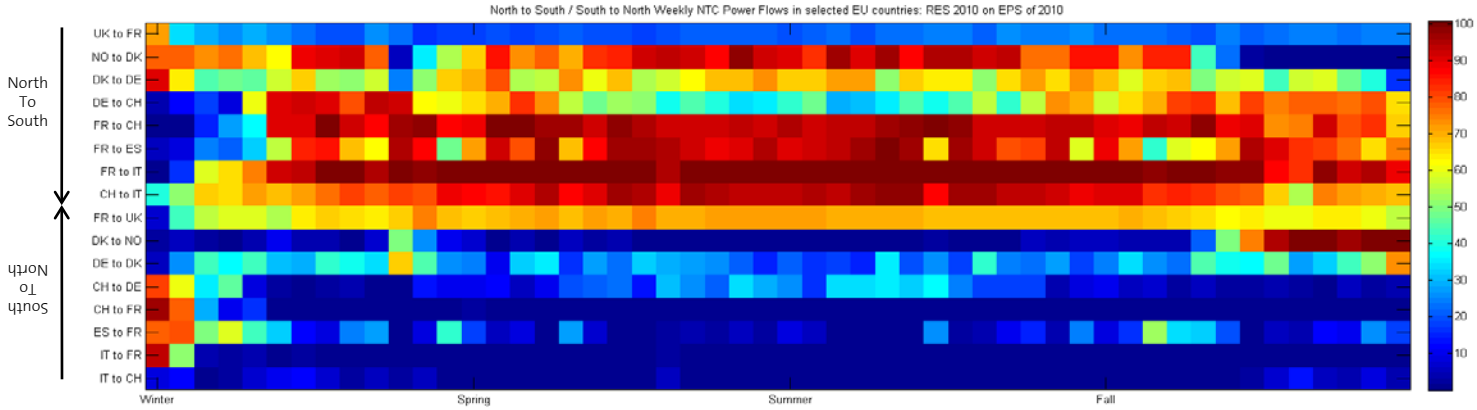

Year 2010 (50% RES)

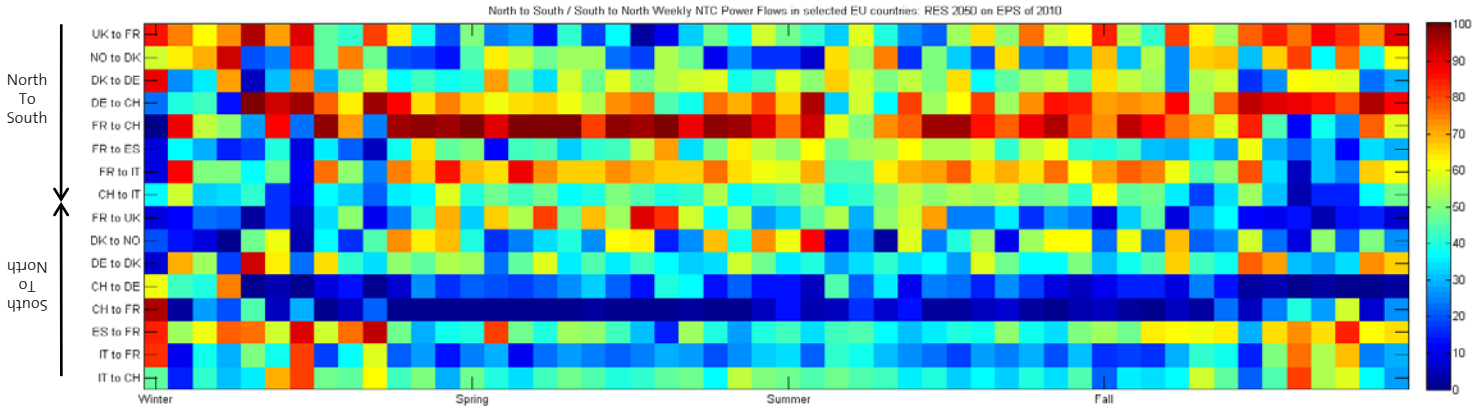

Other Models

- Cyber-Physical Models of Power Systems

  Daniel Kirschen & François Bouffard,
  IEEE Energy & Power Magazine, 2009

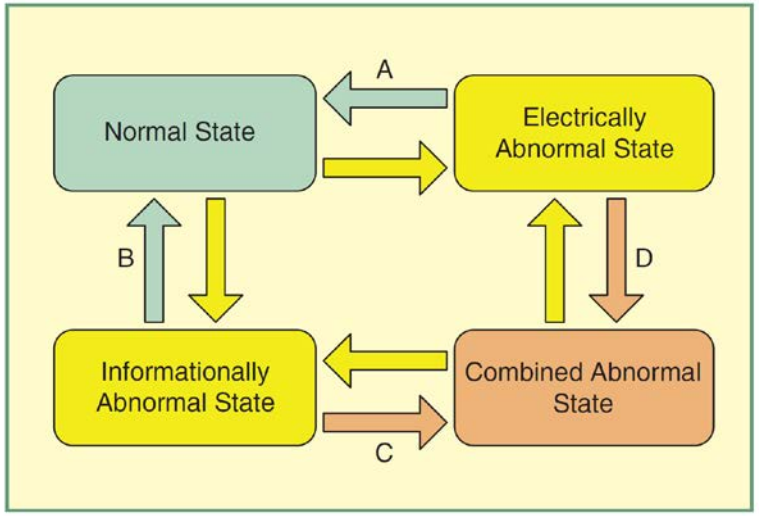

figure 2. Expanded power system security analysis framework.

Some Conclusions (1)

- The challenges of integrating renewables are manifold but – in principal – managable.

- Accurate modeling, simulation and analysis tools necessary for studying power systems and derive **adaptation strategies** from such decision support tools.
  - **Hard Paths** – Solve problems simply by oversizing everything.
    (= oversized, expensive, inefficiently operated power system)
  - **Soft Paths** – Solve problems via more control & optimal operation.
    (= right sized, less expensive, efficiently operated power system)

  Control Based Expansion

- Computation and communication is cheap (and getting cheaper),
  (physical grid investments are expensive)

- Also other challenges (power markets, consumption growth, …)

Building an Energy System is a Team Work

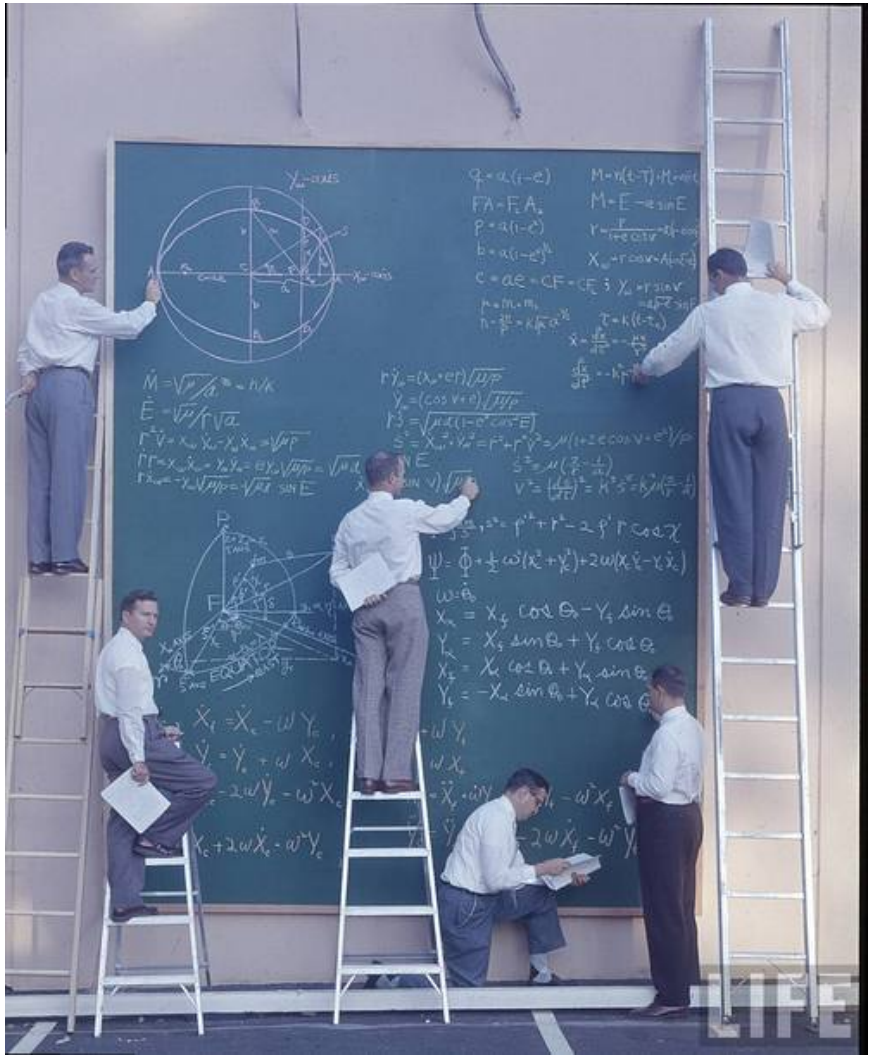

A general reflection on research

Tomas Tranströmer
Nobel Prize Laureate in Literature 2011

Det finns i skogen en oväntad glänta
som bara kan hittas av den som gått vilse.

In the middle of the forest there is an unexpected glade
that can only be found by someone who is lost.