The Role of a Market Maker in Networked Cournot Competition

Subhonmesh Bose, Desmond Cai, Steven Low, Adam Wierman
California Institute of Technology

Overview

We study different market clearing rules in a transmission constrained electricity market. We model the generators using a networked Cournot model and analyze three market clearing objectives – social welfare, residual social welfare, and consumer surplus. We find that:

1. Generalized Nash Equilibrium (GNE) may not exist under certain market maker clearing objectives.
2. In a 2-node network, when equilibria exist, the equilibrium flow could be completely different under the three objectives.

Model

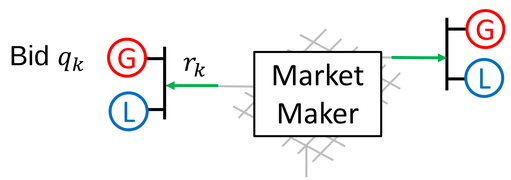

Linear demand $p_k(d_k) = a_k - b_k d_k$

Flow constraints:

$$S = \{r \mid q + r \geq 0, |Hr| \leq f, 1^T r = 0\}$$

Generator k chooses bid $q_k \geq 0$ to maximize payoff:

$$\pi_k^G(q, r) = q_k p_k(q_k + r_k) - c_k q_k^2$$

Market maker chooses flows $r \in S$ to maximize one of:

$$W_{soc} = \sum_k \left(\int_0^{q_k + r_k} p_k(w_k) dw_k - c_k q_k^2 \right)$$

$$W_{res} = W_{soc} - \sum_k \pi_k^G(q, r)$$

$$W_{con} = \sum_k \left(\int_0^{q_k + r_k} p_k(w_k) dw_k - (q_k + r_k) p_k(q_k + r_k) \right)$$

Main Results

Theorem 1: A GNE exists if the market maker maximizes W_{soc} or W_{res}. However, a GNE may not exist if the market maker maximizes W_{con}.

Theorem 2: Consider a 2-node network with infinite line capacity and some system parameters such that a GNE always exists for all three market maker objectives.
(a) If market maker maximizes W_{soc}, then $r^* < 0$.
(b) If market maker maximizes W_{res}, then $r^* = 0$.
(c) If market maker maximizes W_{con}, then $r^* > 0$

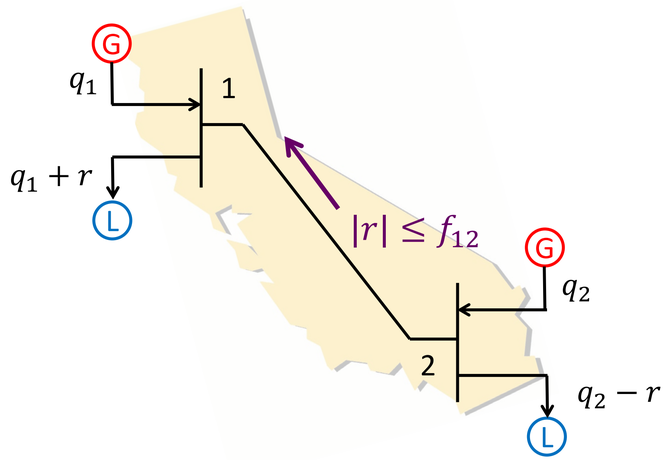

Impact of Line Capacity

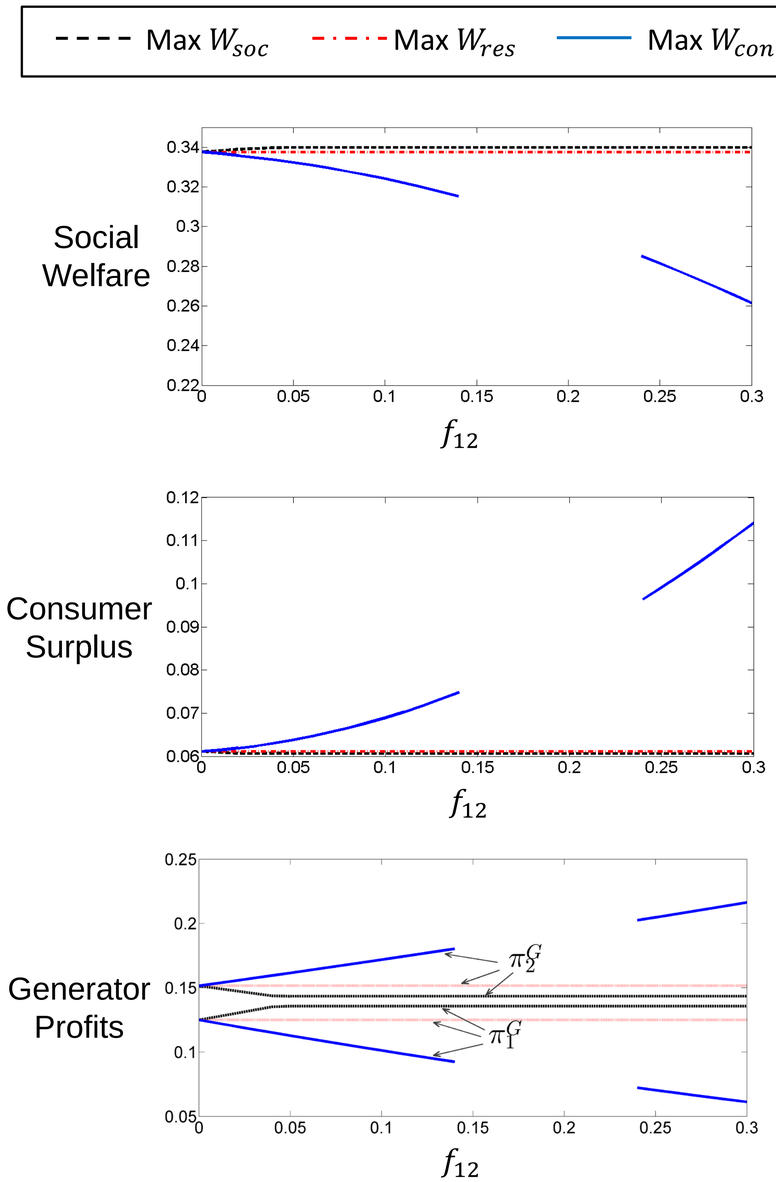

Supported by: NSF, ARPA-E, SCE, Resnick Institute, Okawa Foundation