Ultra-long haul terrestrial 40Gb/s DWDM transmission

Pavel Mamyshev
Mintera Optical Networks

40G: The Next Wave in Network Capacity

Pavel.Mamyshev@mintera.com

Evolution of TDM rates

Growth rate: factor 4 in 5 years

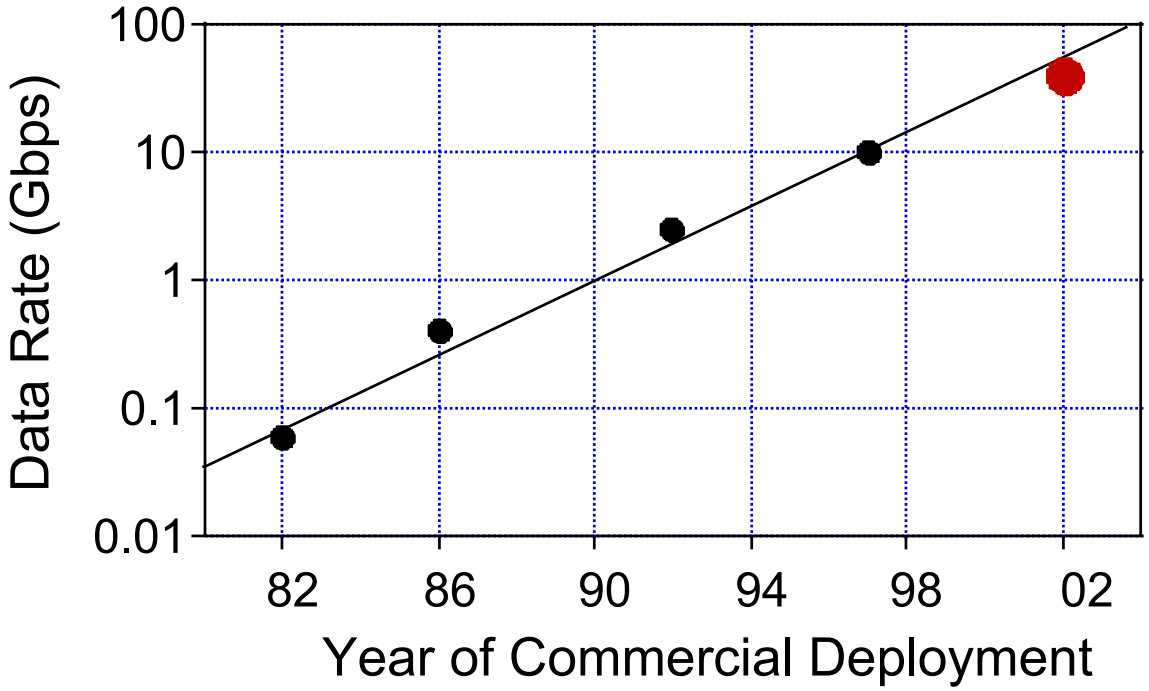

- Deployment of 40G in 2002-2003?

MINTERA Optical Networks

Drivers for Higher Bit Rates

- Technical curiosity. Have we ever stopped pushing for faster networks? Why stop at 10Gbps?
- Economics of transmission, switching and routing...cost per bit
  - Focus on cost reductions (CapEx and OpEx)
  - 4 x Speed @ 2.5 x Cost
- Need for higher bandwidth
  - Traffic is still growing fast
  - Fiber glut (maybe)…but not bandwidth glut!

MINTERA Optical Networks

How to achieve long distances

- Modulation format
  - Robust to non-linearity ✓
  - High receiver sensitivity ✓
- Fiber
  - High A_{eff} & dispersion ✓
  - Dispersion managed fiber – avoid DCM ✓
- Distributed Raman (fwd&bwd) ✓
- FEC with high coding gain ✓
- Short amplifier spacing
- Large WDM channel spacing

MINTERA Optical Networks

Carrier Suppressed-RZ (dual-frequency) modulation format

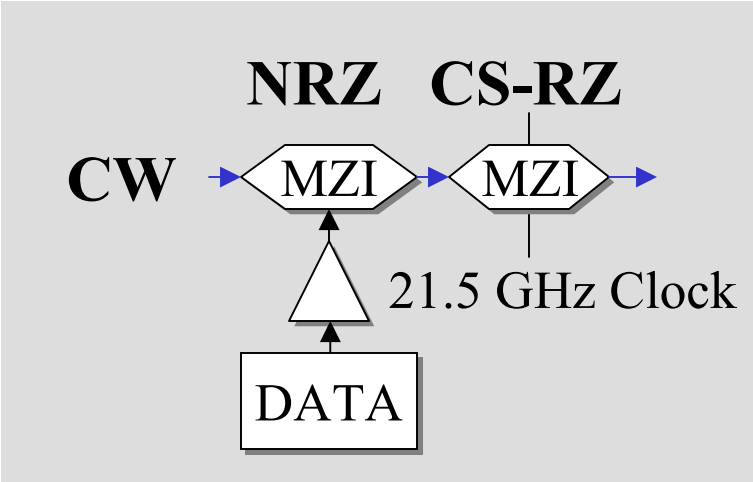

43 Gb/s

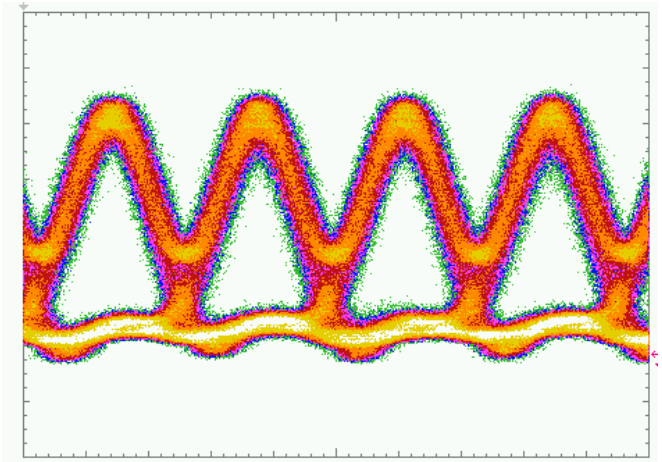

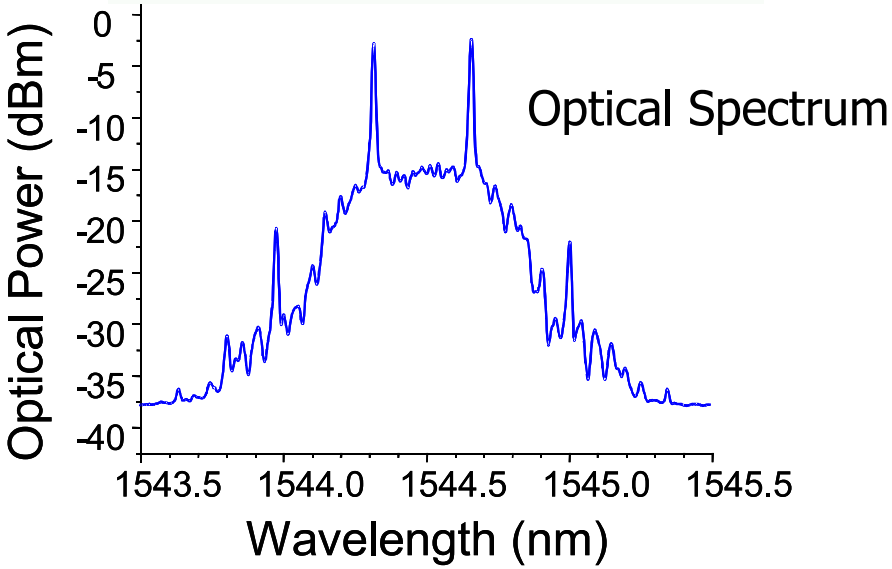

- **Very tolerant to**
  - **Spectral filtering**
  - **Fiber nonlinearity**

MINTERA Optical Networks

43G Transponder

- Software controlled
- Ctrl loops for modulators etc

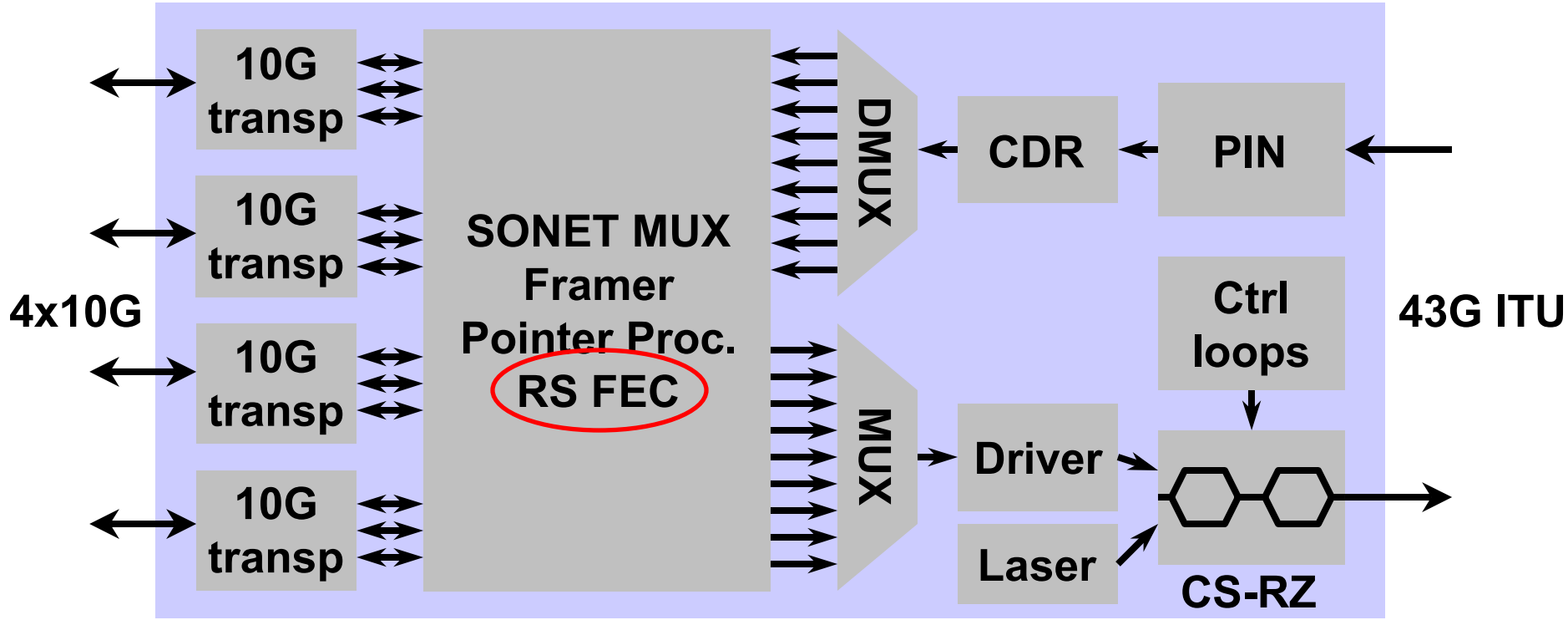

MINTERA Optical Networks

Transmission Experiment Set-up

40×43G Transmitter/Receiver

Loop with 400 km UltraWave™ fiber

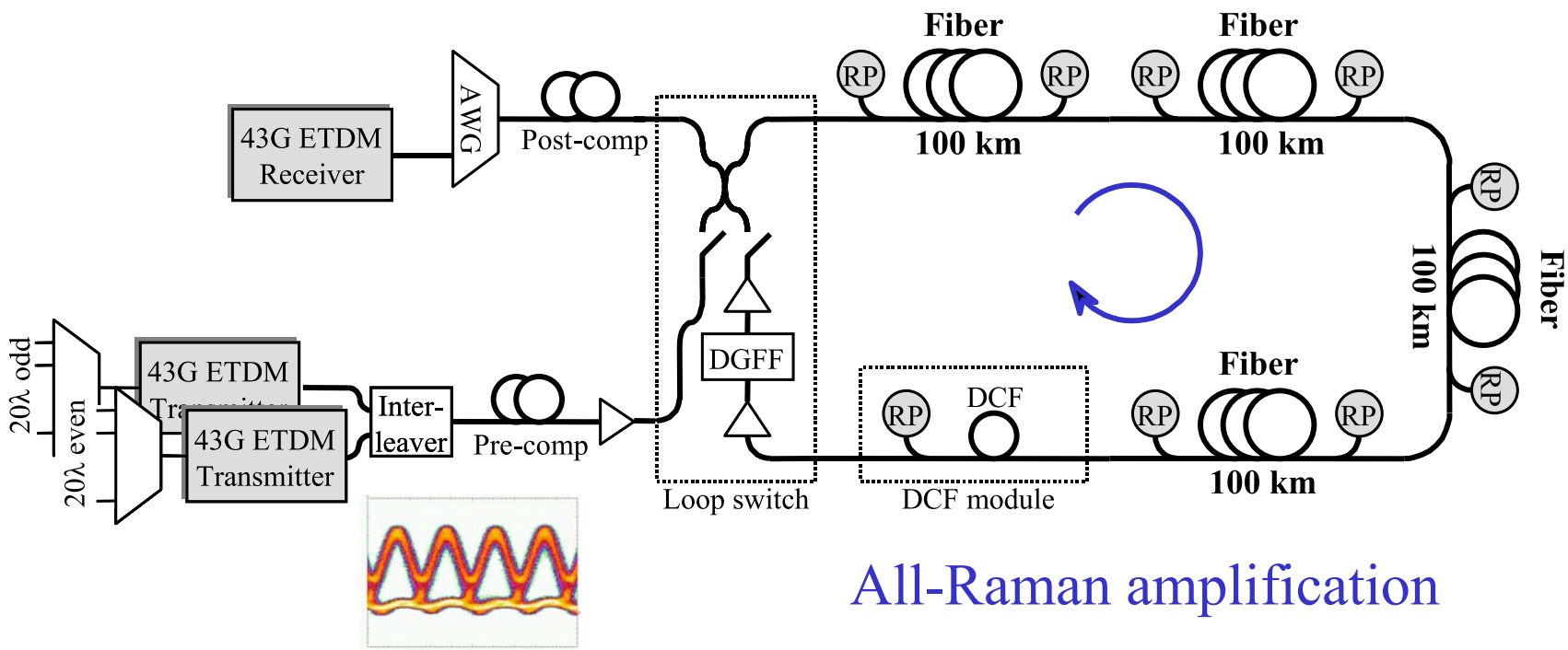

All-Raman amplification

MINTERA Optical Networks

OFS UltraWave™ transmission fiber

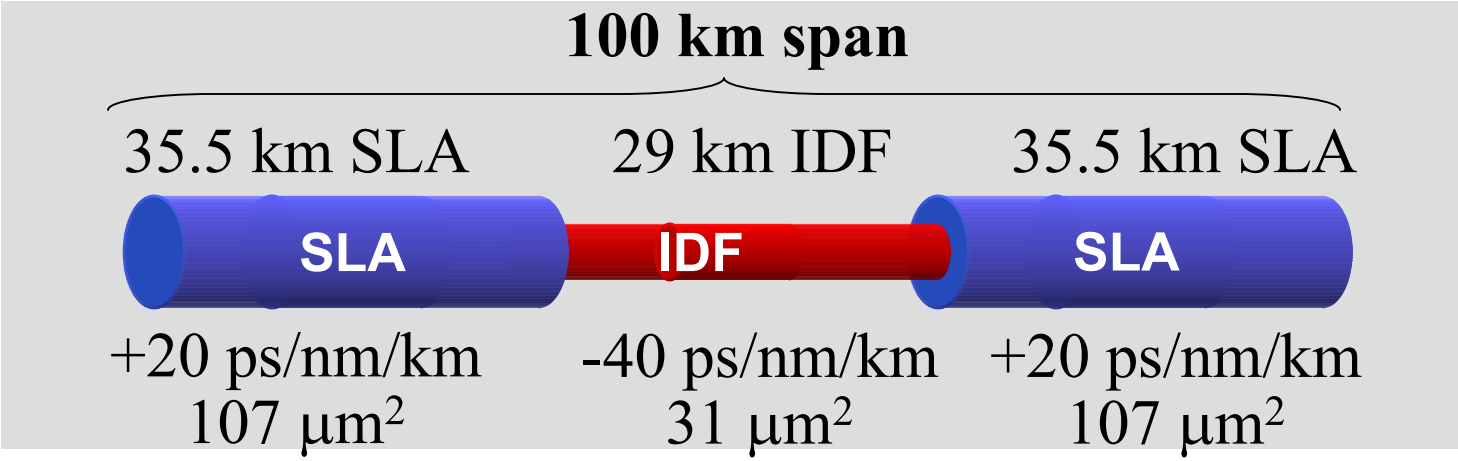

- Low nonlinearity where signal is strong
- Low Rayleigh scattering where the Raman gain is high
- High Raman gain in the middle

- Symmetrical span - important for terrestrial systems
- Well slope matched (net slope $<1.9\times10^{-3}$ ps/nm^2/km)
- PMD < 0.04 ps/√km

MINTERA Optical Networks

Double-periodic dispersion map

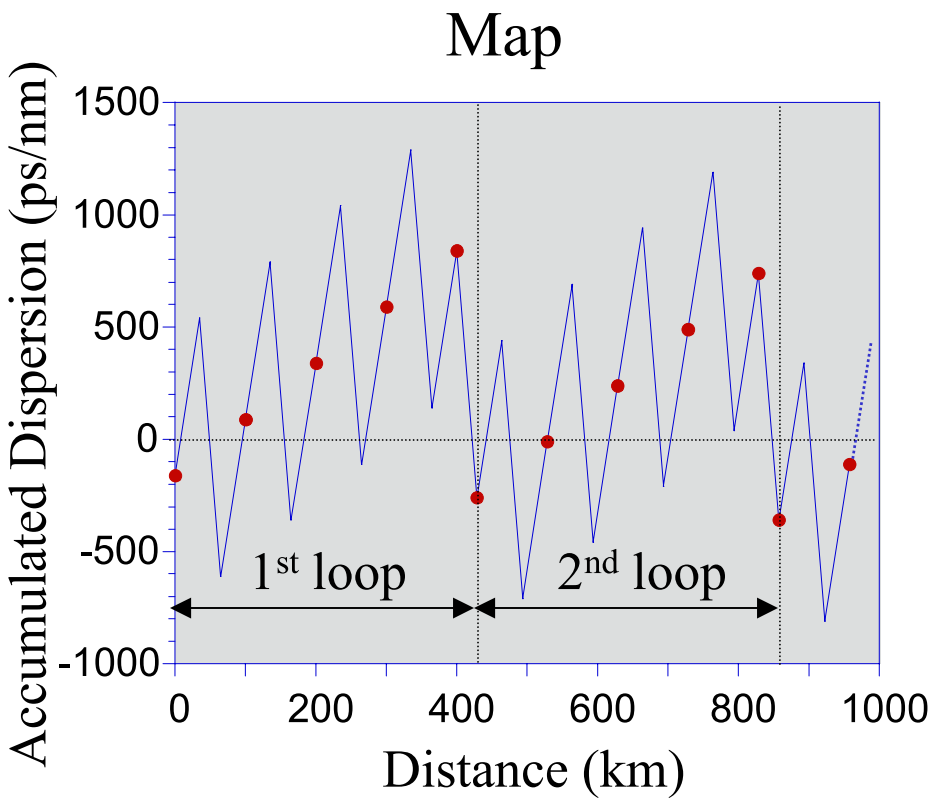

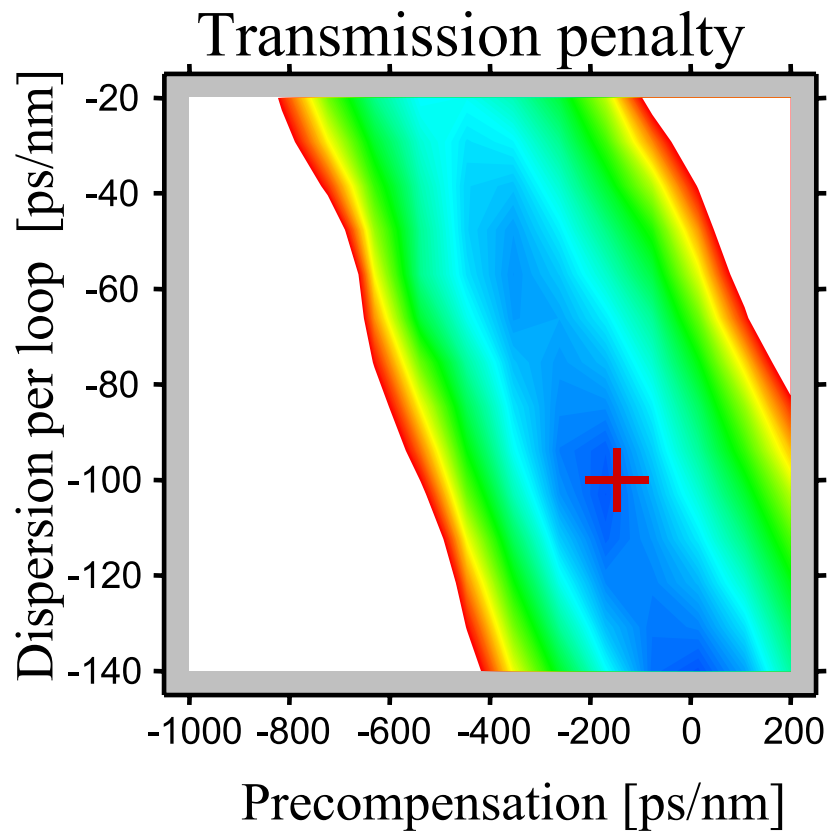

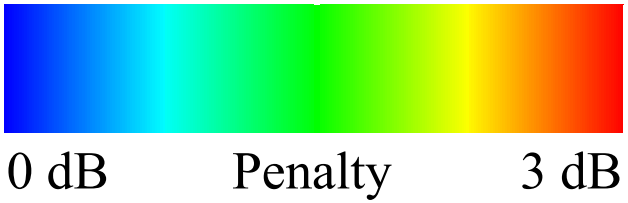

Net dispersion per 100km span is 254 ps/nm

Net dispersion per 400km super-span (loop) is –100 ps/nm

Dispersion map – super span

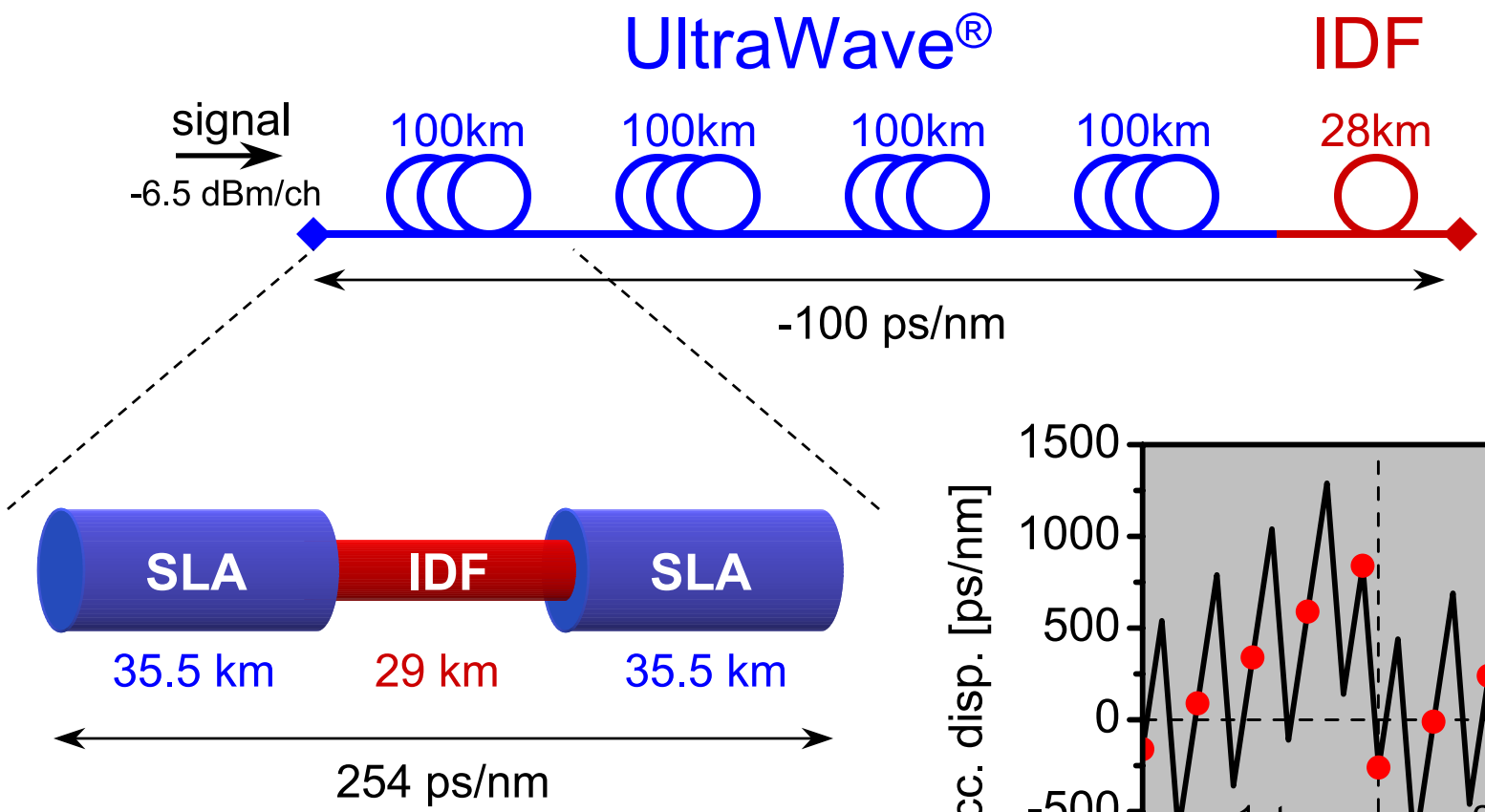

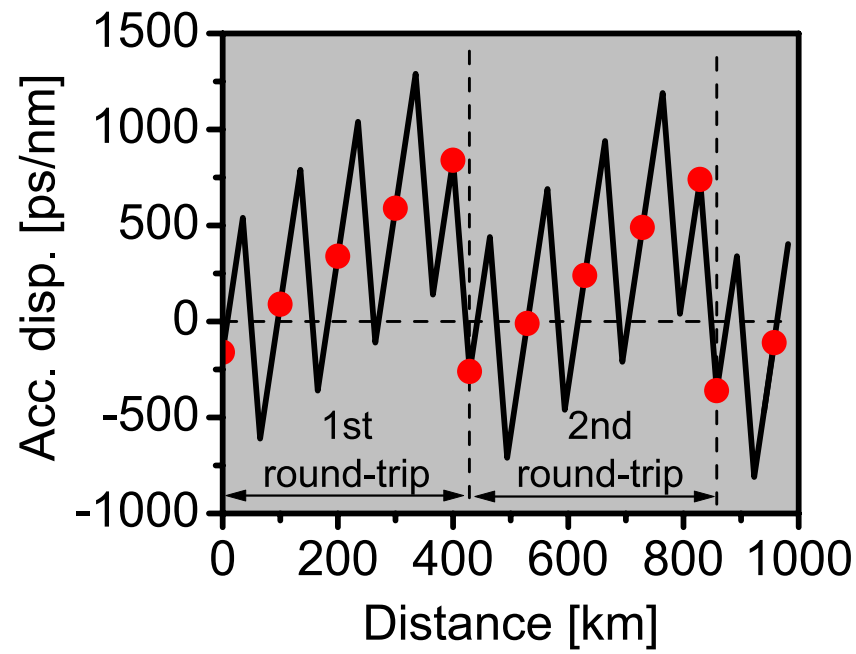

MINTERA Optical Networks

Best Raman gain distribution

Best Raman gain distribution?
Trade-off:

- OSNR
- Nonlinearity
- Double Rayleigh Back Scattering
- RIN from forward pumps

Curve shows eff. OSNR per span

- Transparent span
- Fixed nonlinearity (0.02rad)
- Double Rayleigh Back Scattering included

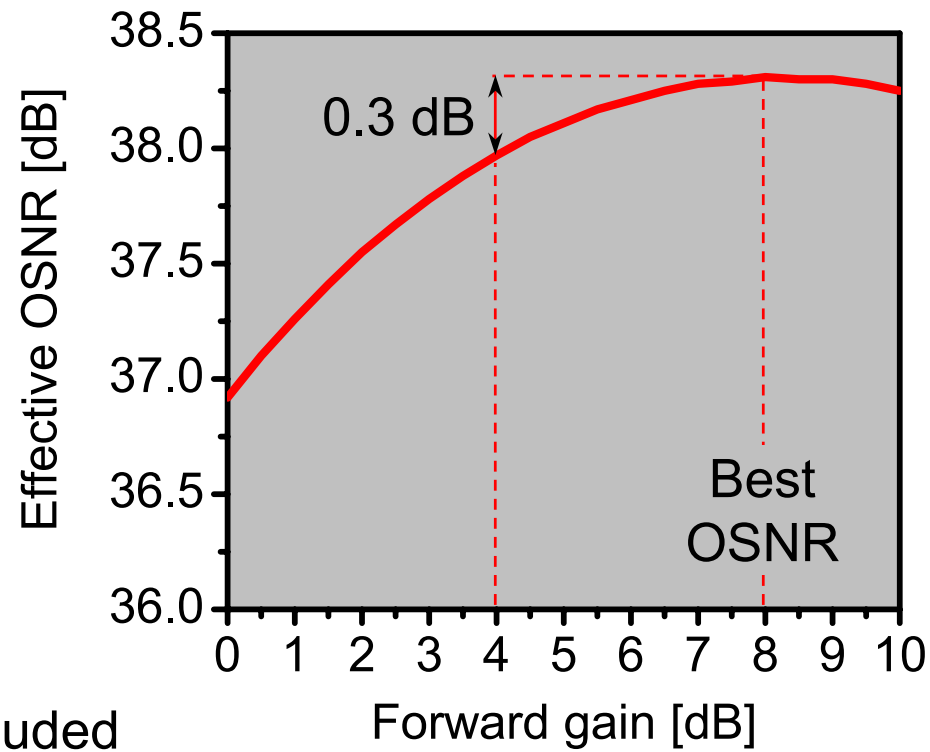

MINTERA Optical Networks

All-Raman distributed amplification

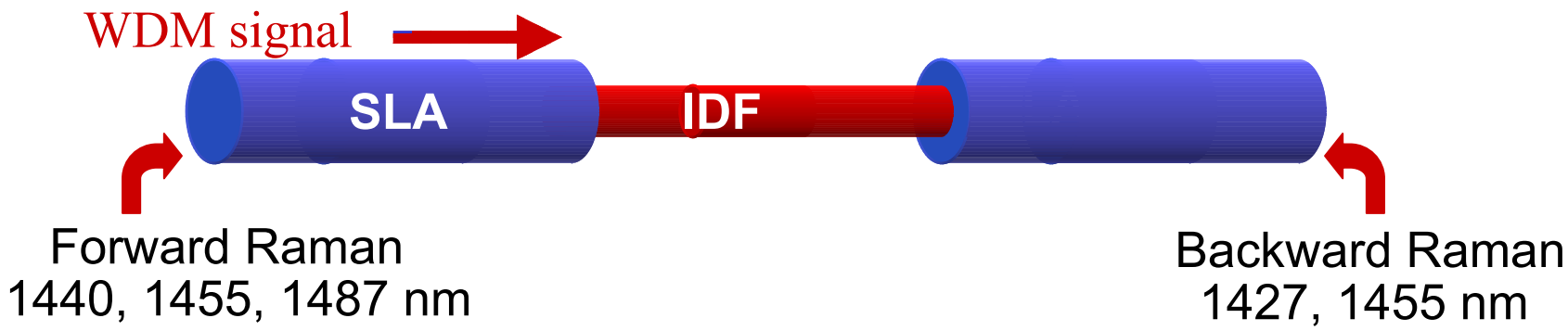

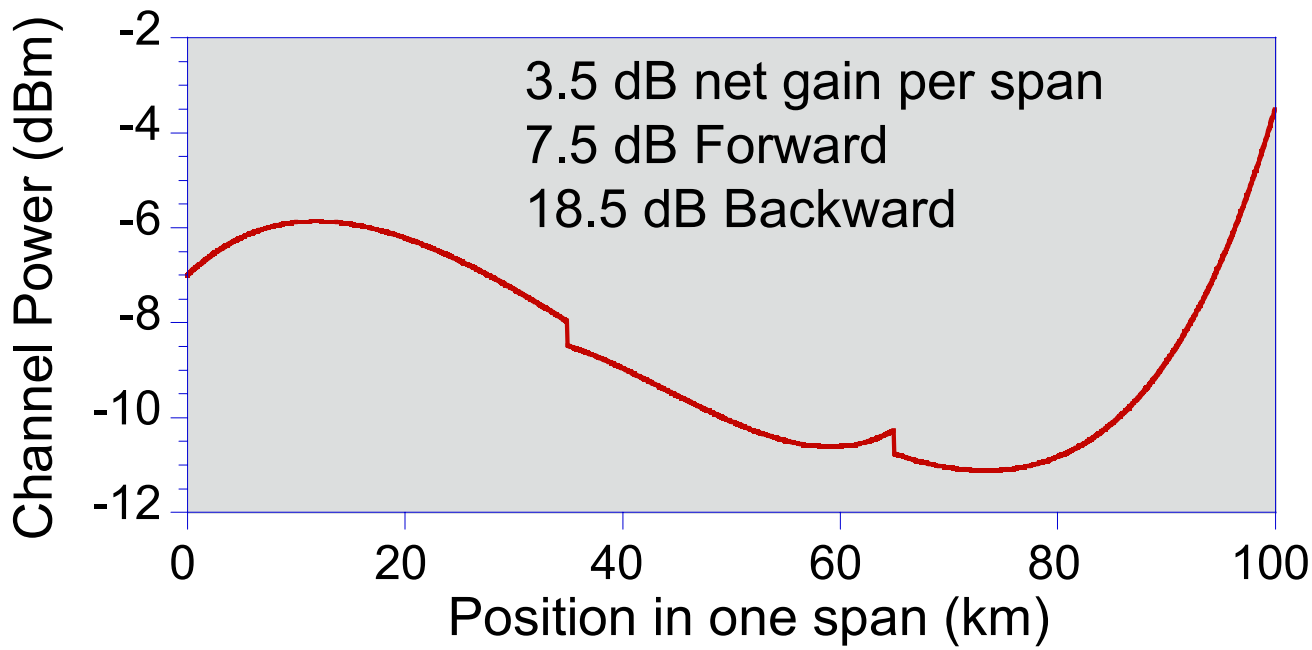

MINTERA Optical Networks

Forward and backward Raman gain

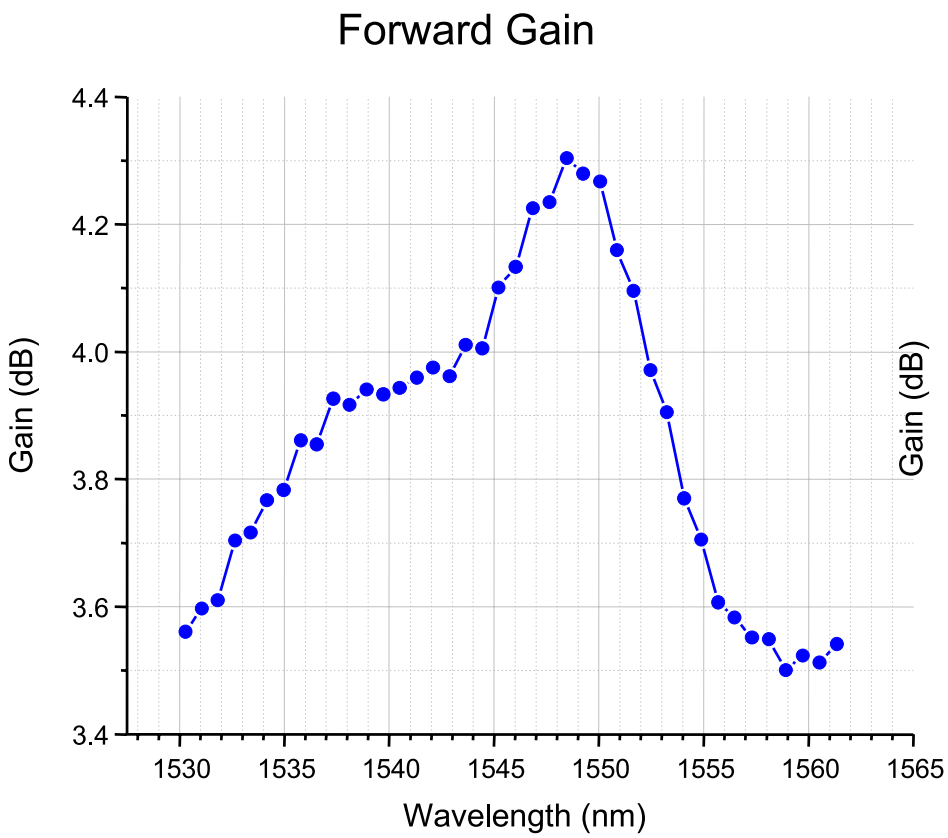

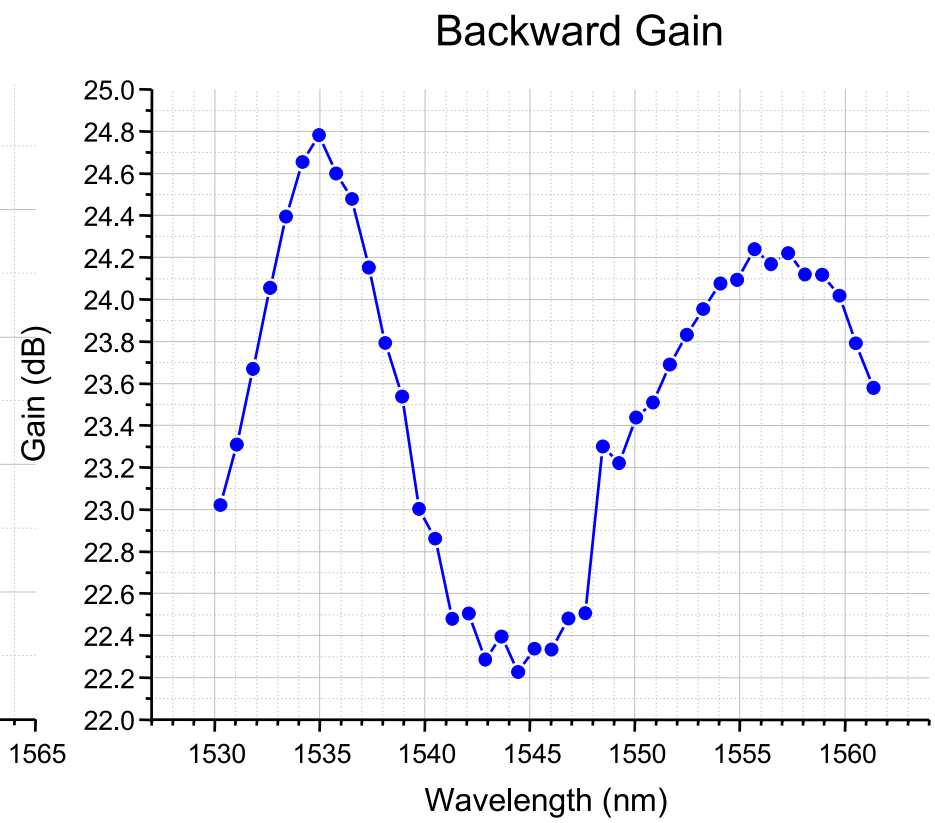

MINTERA Optical Networks

Total Raman Gain

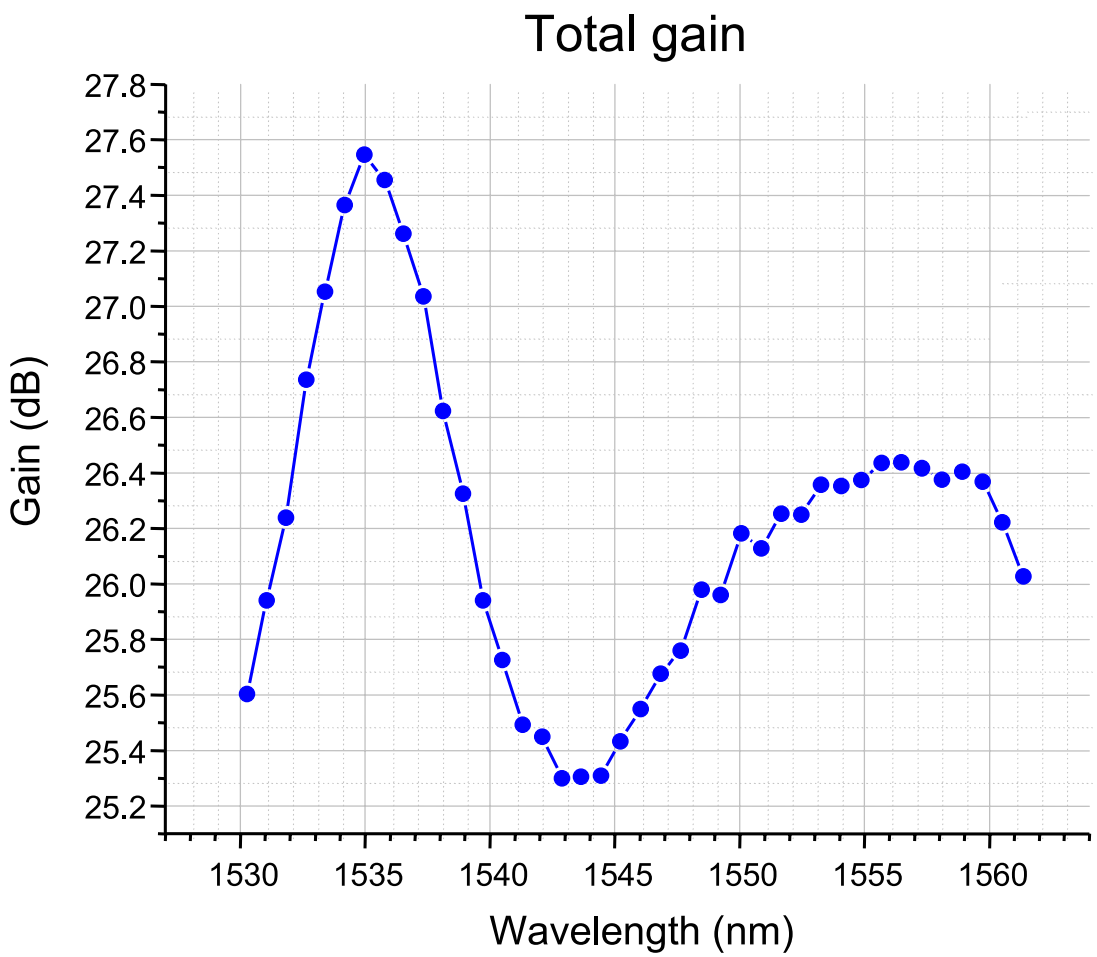

MINTERA Optical Networks

Output Spectrum and Target GFF

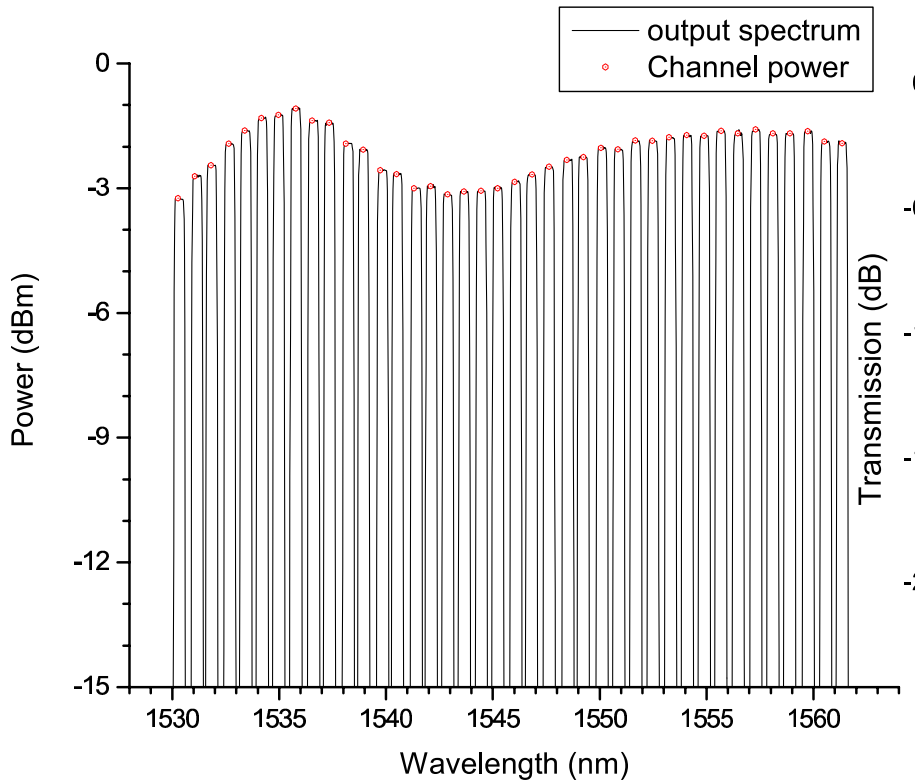

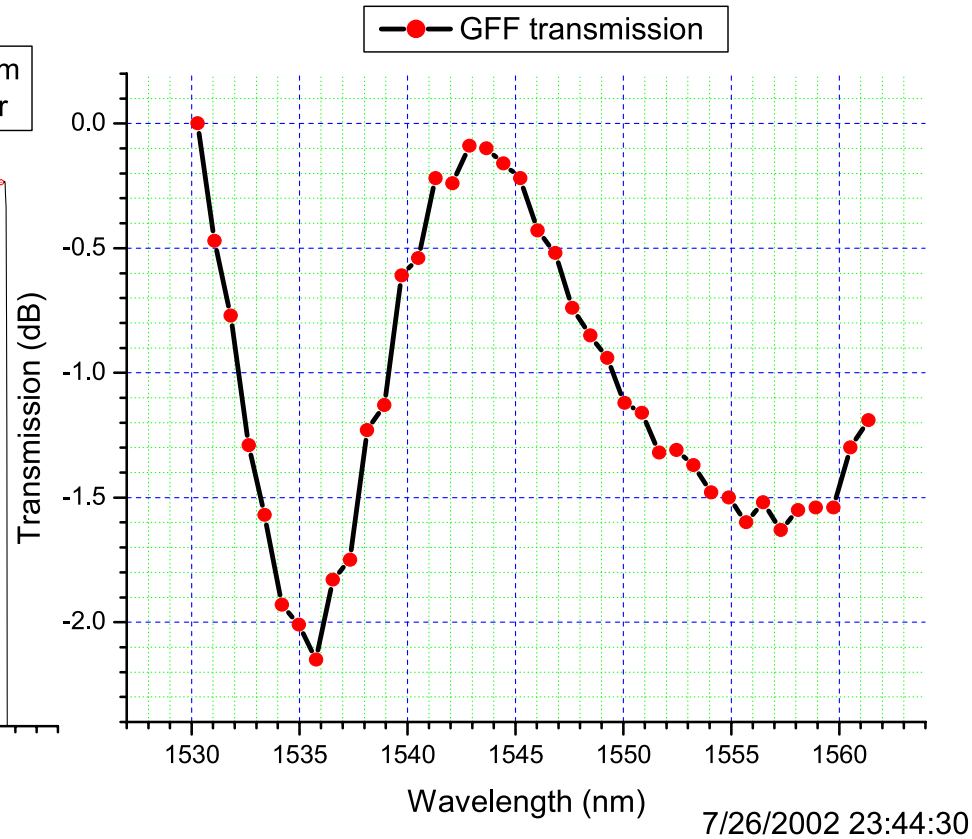

GFF is used to equalize the output power, not only the Raman gain

MINTERA Optical Networks

Net gain for 4 spans

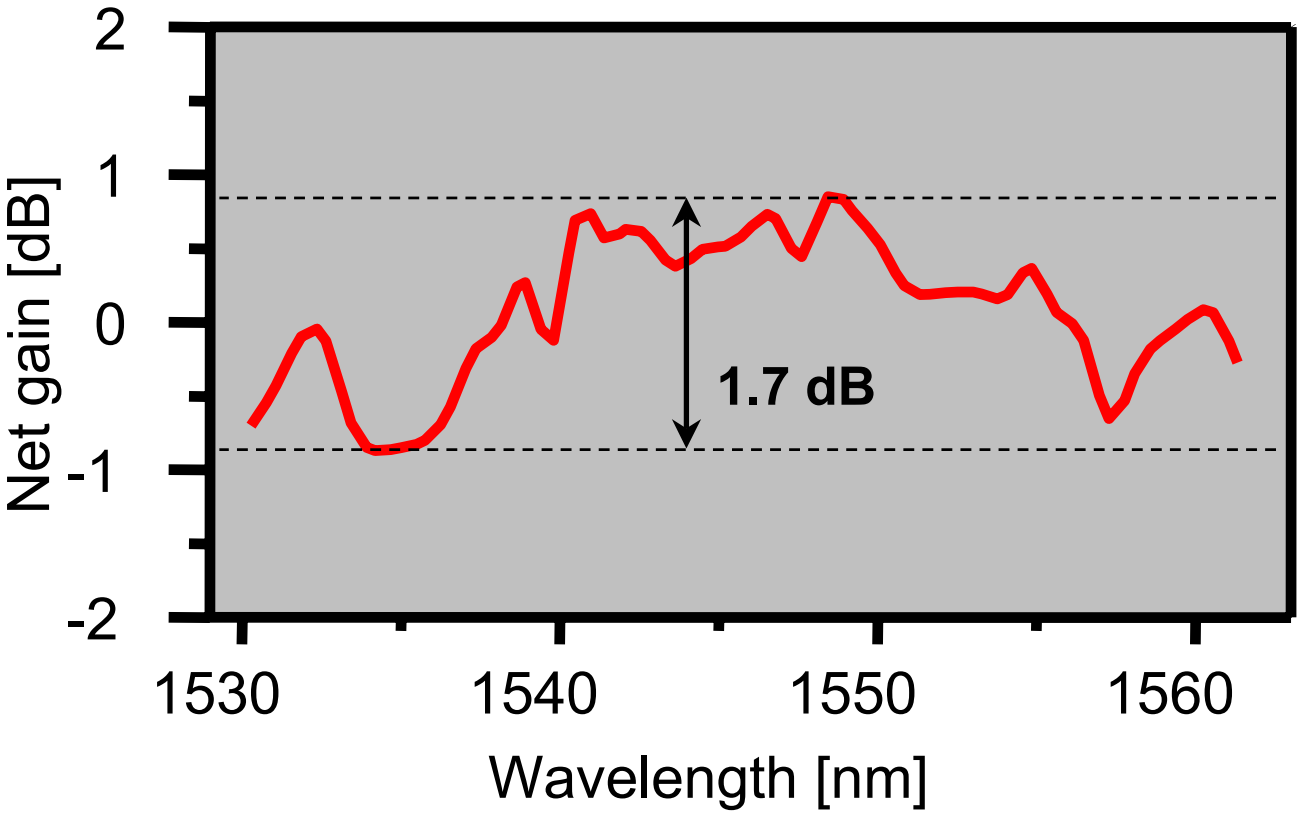

- 0.4 dB gain variation per span

MINTERA Optical Networks

Set-up

40×43G Transmitter/Receiver

Loop with 400 km UltraWave™ fiber

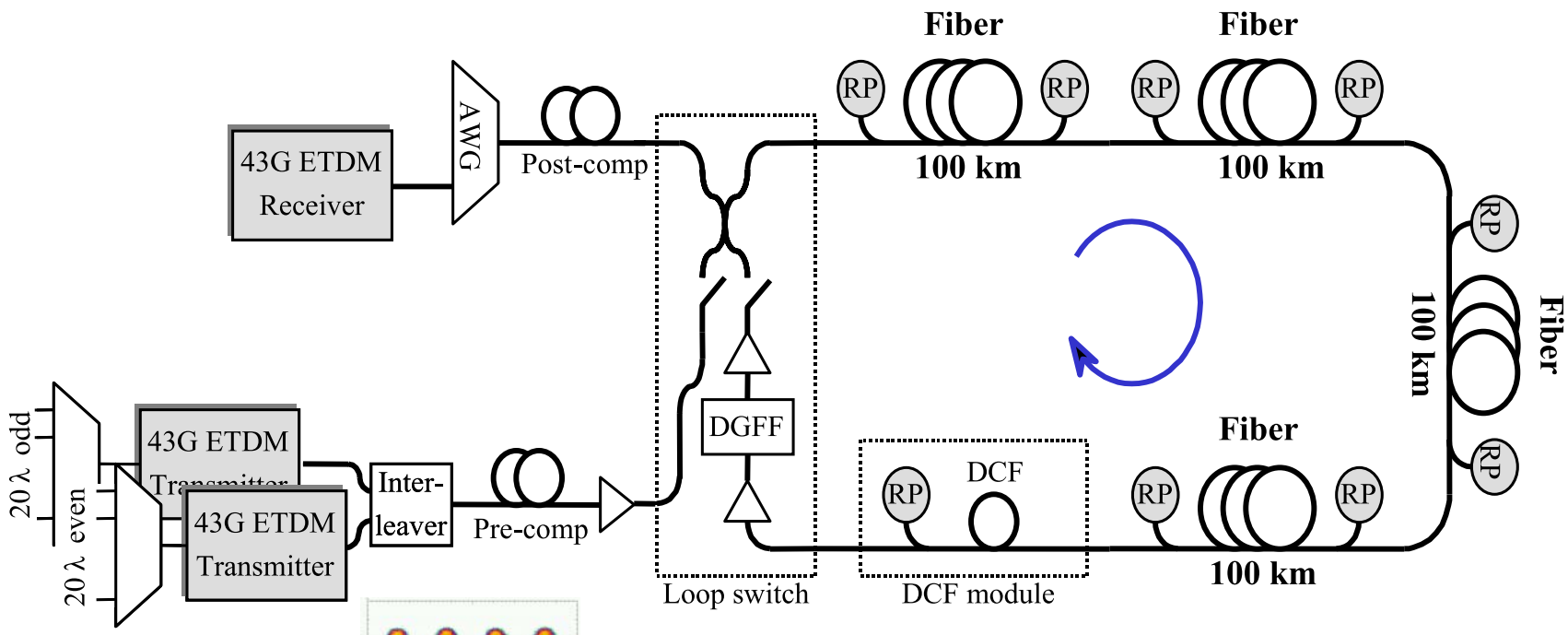

All-Raman amplification

MINTERA Optical Networks

Spectrum after 5200km

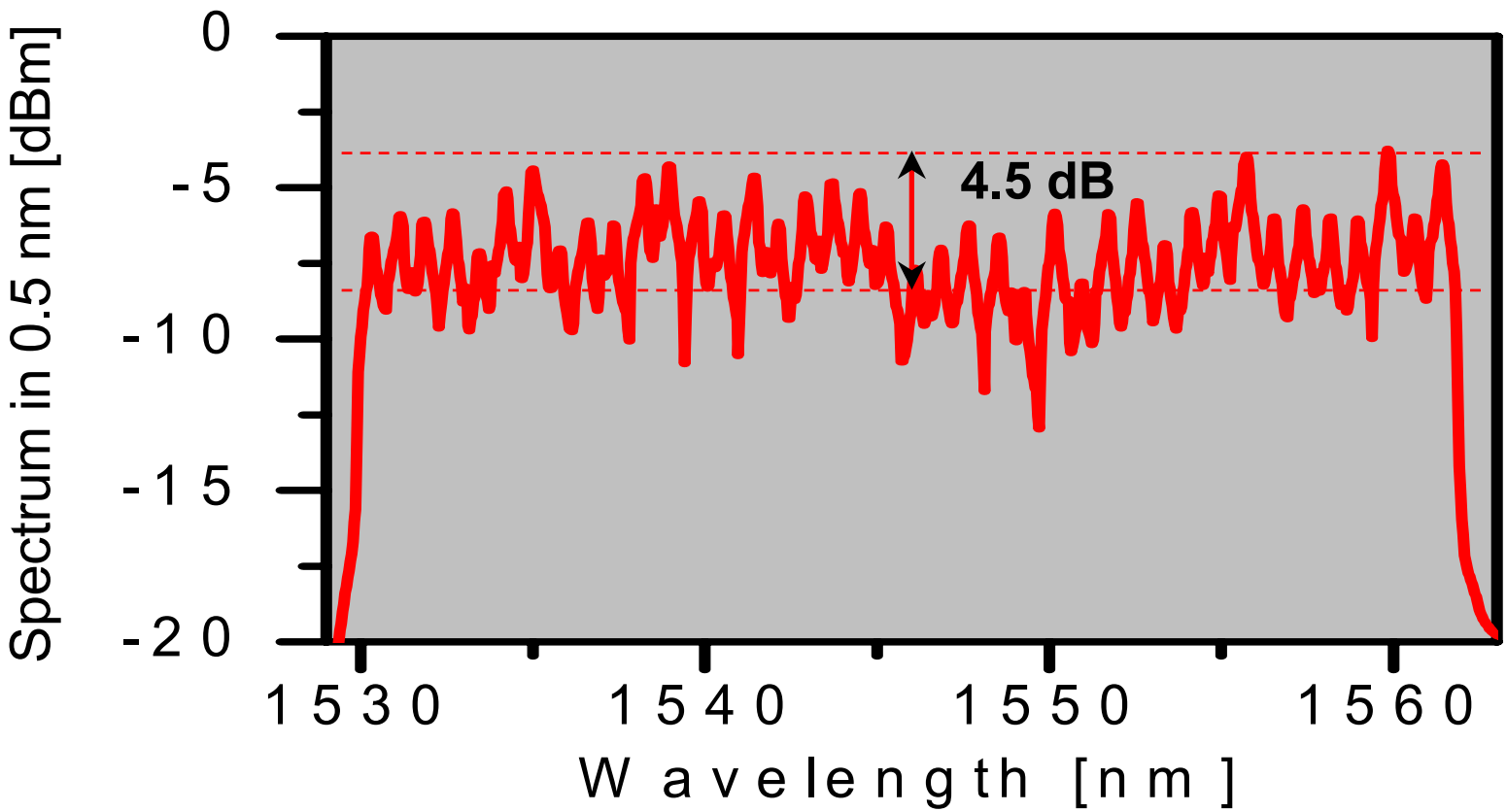

- 4.5 dB channel power variation after 5200km

MINTERA Optical Networks

Transmitter with EFEC

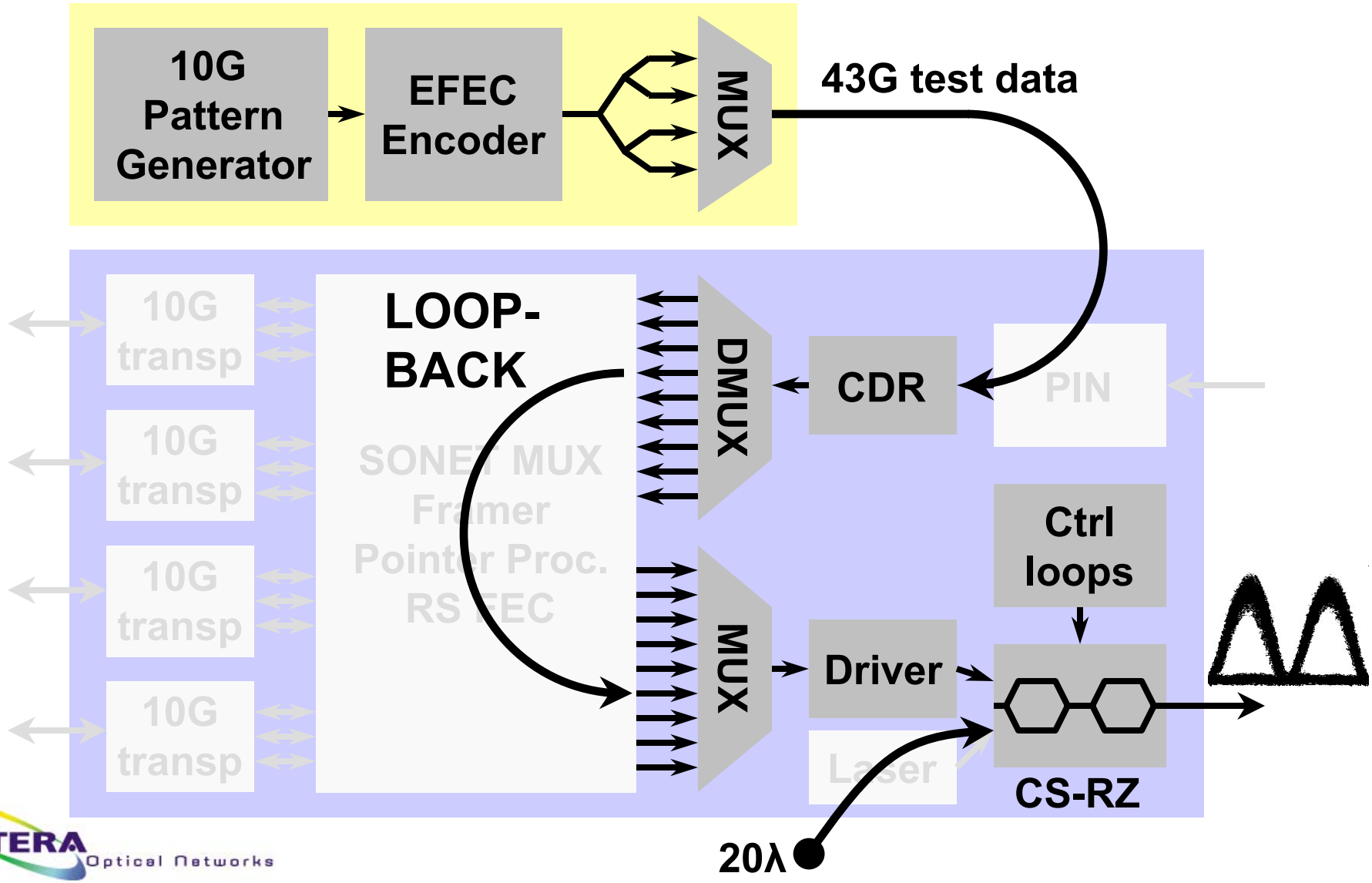

MINTERA Optical Networks

Receiver

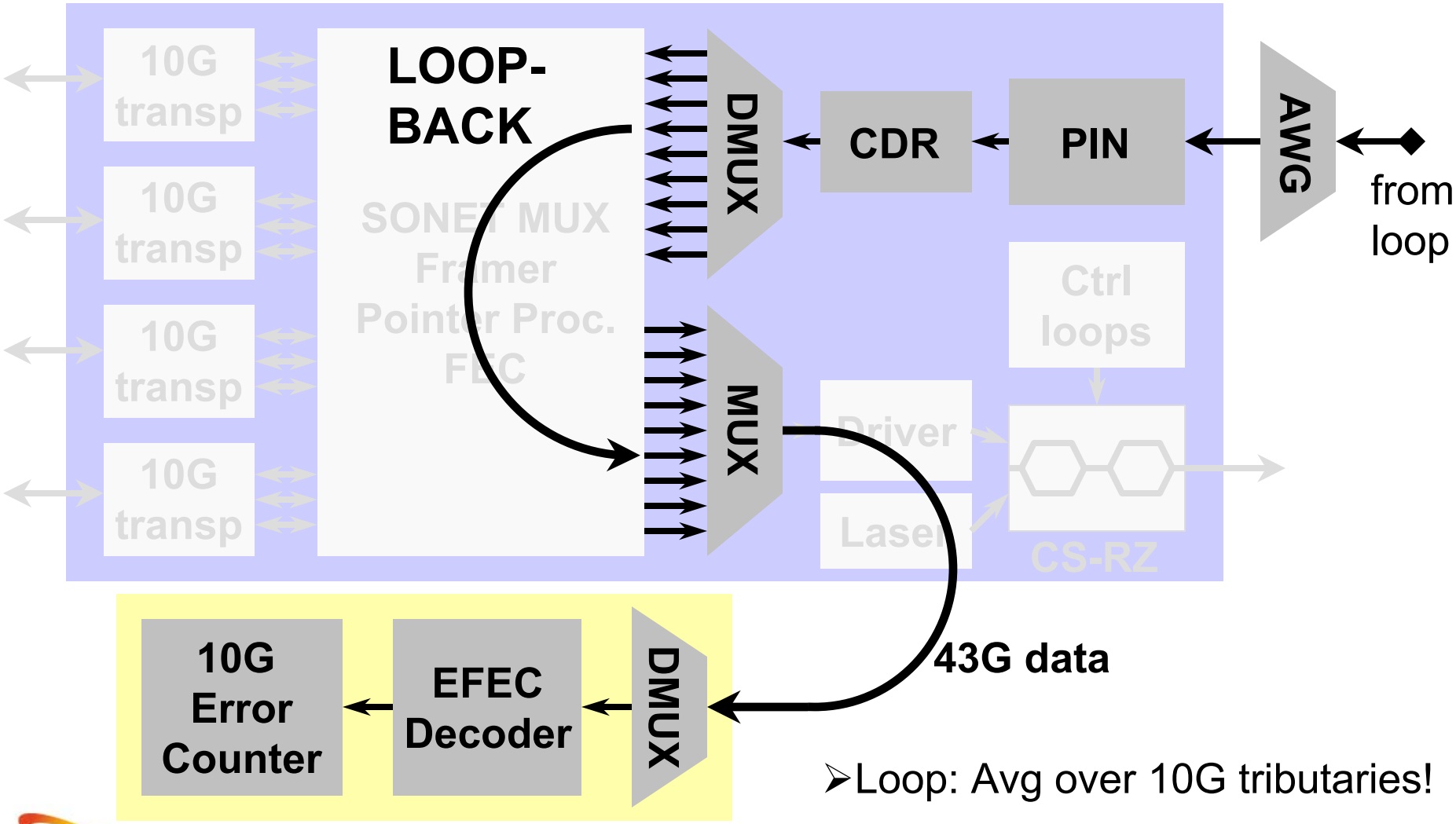

- Loop: Avg over 10G tributaries!

MINTERA Optical Networks

Back-to-back sensitivity

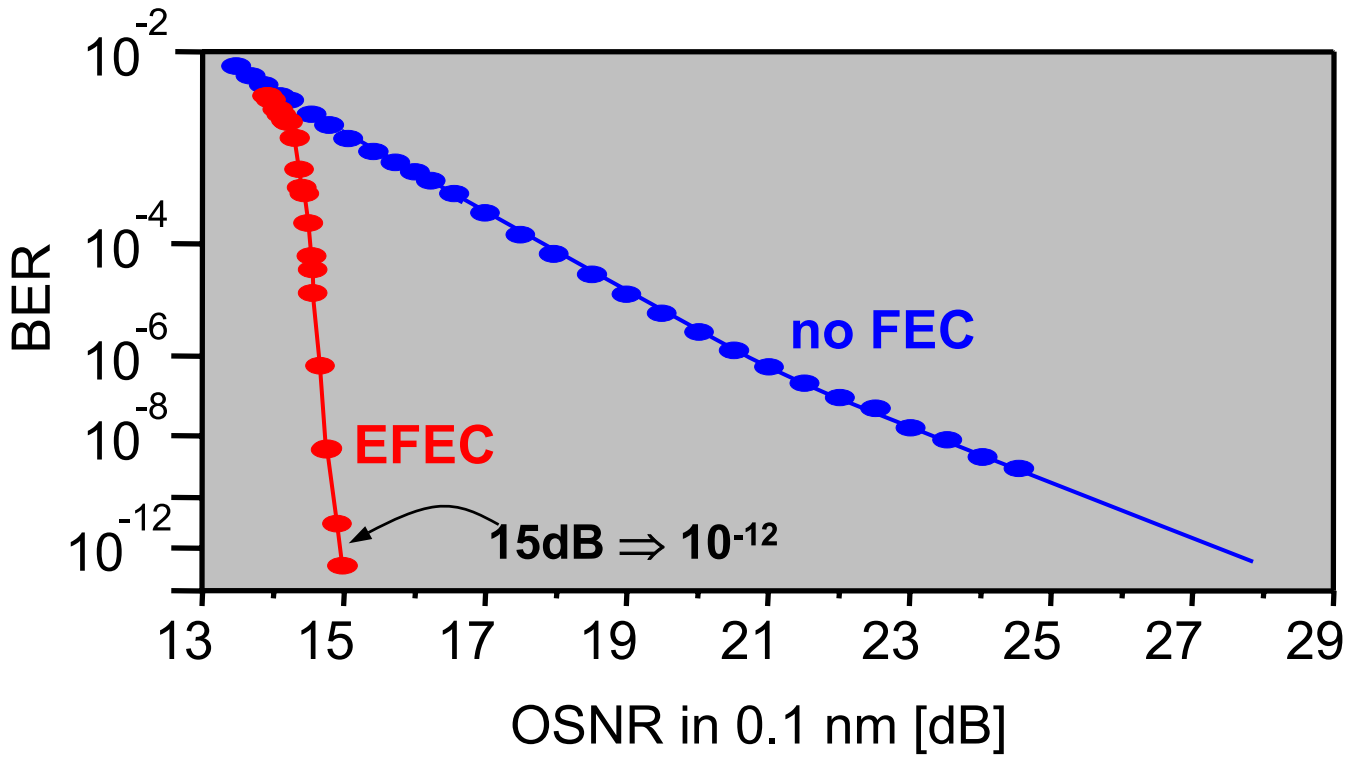

- Back-to-back: OSNR=15 dB ⇒ BER=10^{-12}
- Same 7% overhead as standard RS FEC

MINTERA Optical Networks

OSNR after 5200km

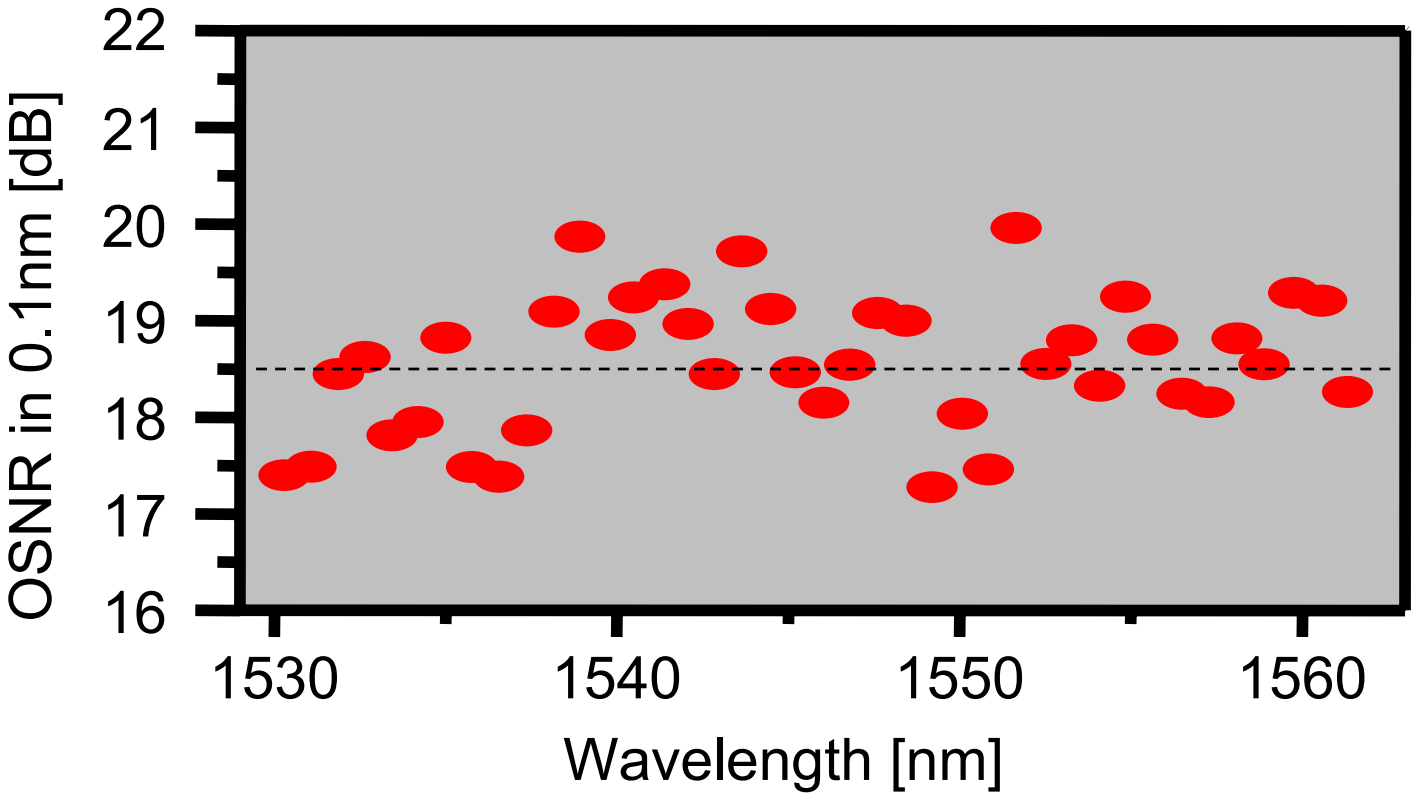

- OSNR after 5200 km ~18.5 dB
- Back-to-back: OSNR=15 dB $\Rightarrow$ BER=10^{-12}

MINTERA Optical Networks

Demonstration of BER<10^{-12}

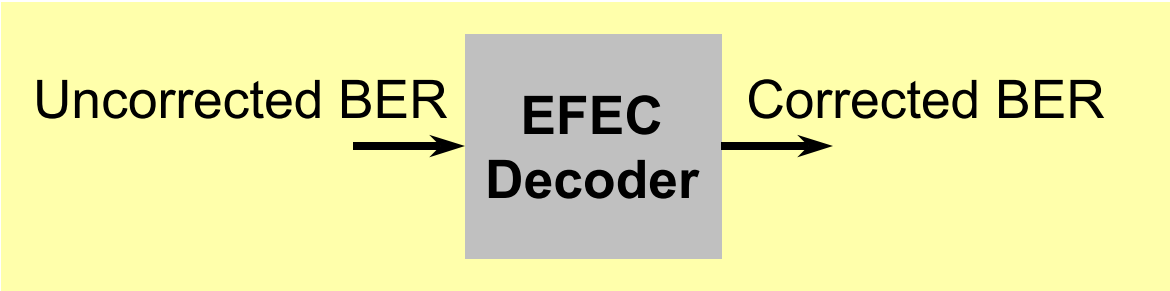

- Demonstration of corrected BER < 10^{-12} requires 4 hrs / ch
- Measure all 40 channels: ***weeks!***
- Practical approach:
  - Measure corrected –vs – uncorrected BER ***after transmission*** for one channel
  - Measure uncorrected BER for other 39 channels
  - Use relation to find corrected BER

MINTERA Optical Networks

Measured EFEC Performance after transmission

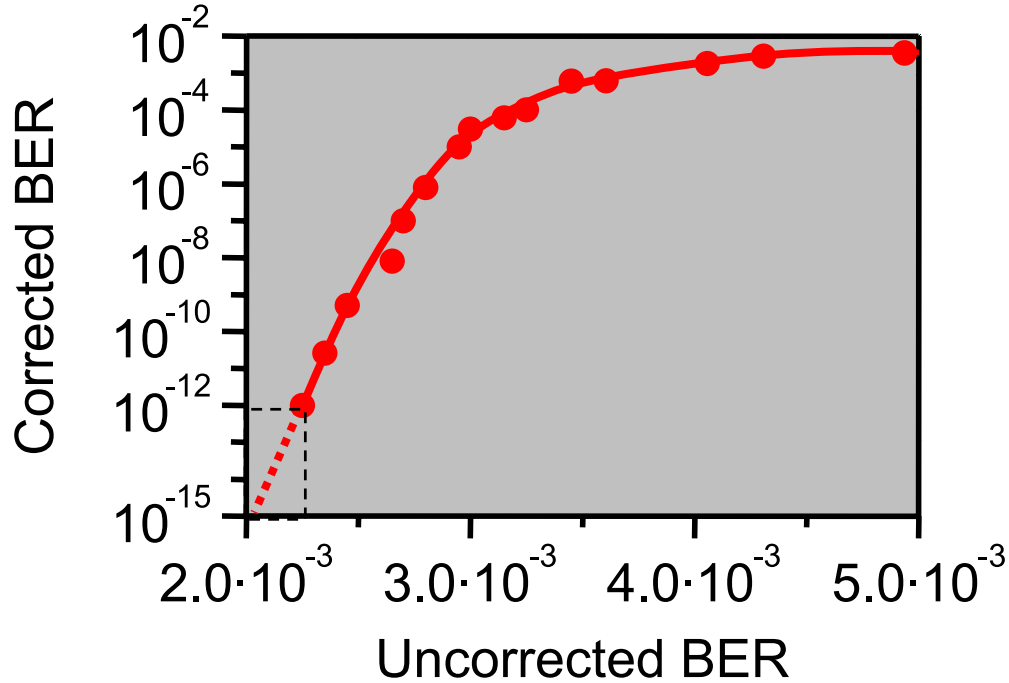

Measured EFEC performance after transmission

BER=$2.3\cdot10^{-3} \rightarrow 10^{-12}$: Coding gain ΔQ=7.8 dB @ 10^{-12}

Extrapolated EFEC performance after transmission

BER=$2\cdot10^{-3} \rightarrow 10^{-15}$: Coding gain ΔQ=8.7 dB @ 10^{-15}

Standard RS(255,239) : Coding gain ΔQ=6.0 dB @ 10^{-15}

MINTERA Optical Networks

BER after 5200 km

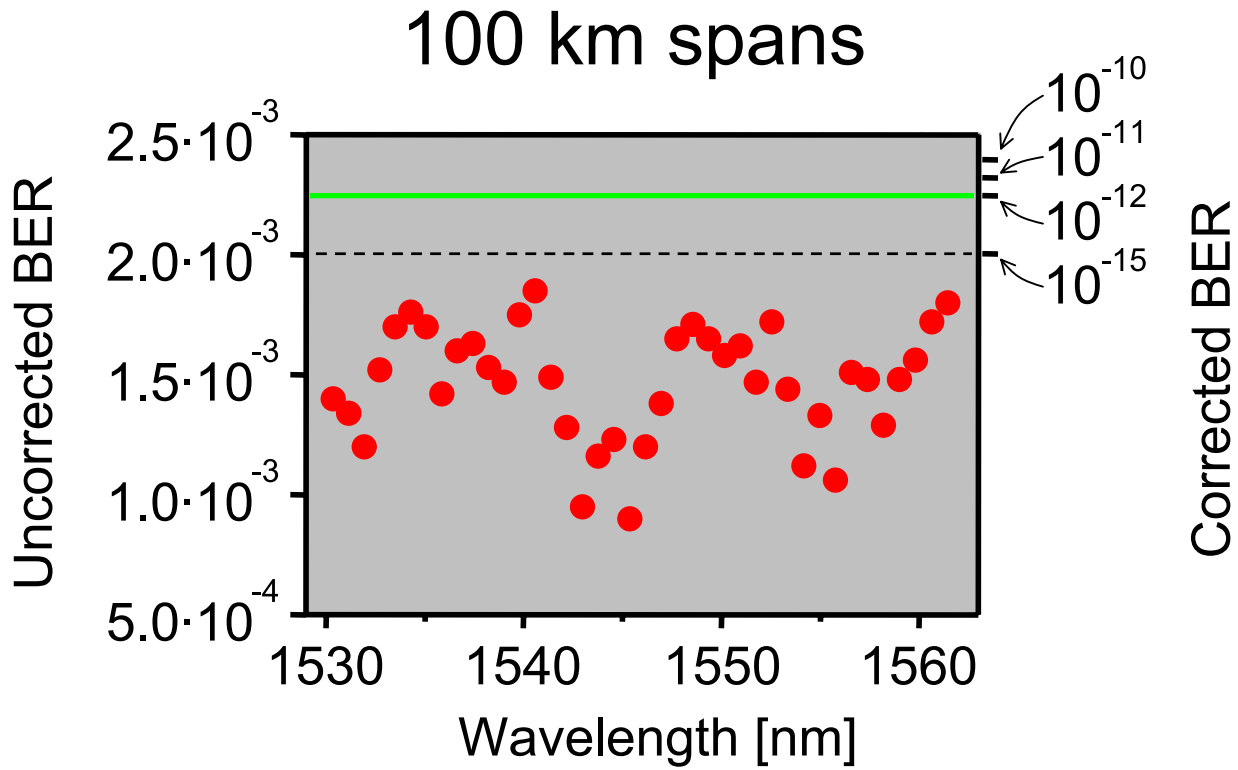

- All channels better than 10^{-12} (10^{-15})
- Limiting effects
  - SPM / OSNR (insignificant WDM)
  - PMD

MINTERA Optical Networks

Summary

Advances in 40Gb/s technology, Raman optical amplifiers and fiber technology make 40Gb/s DWDM transmission possible over distances approaching transatlantic distances while keeping

> "terrestrial" amplifier spacing of 100 km and high spectral efficiency.

MINTERA Optical Networks

Migration to 40G

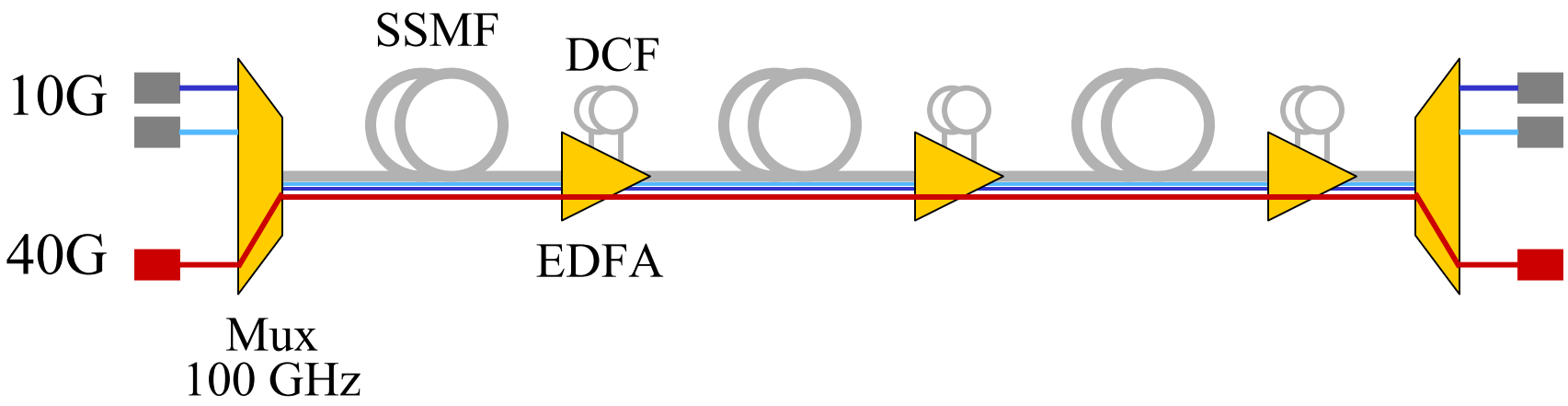

- 40G can be added to installed 10G systems
- 10 and 40G can easily co-exist within the same transmission band
  - *Similar dispersion maps and tolerance*
  - *Same requirements to amplification*
  - *Same Mux/Demux (100 GHz)*

40G is an evolution, not revolution

MINTERA Optical Networks

Thank You!

Pavel.Mamyshev@mintera.com